CREATION DATE	14-Sep-00
MODEL NAME	67212MEDH187
DRAWING NAME	67212MEDH187

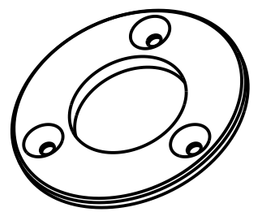

SCALE 1:1

1. MATERIAL:
   MATERIAL: 6061-T651
   ALUMINUM PER SPECIFICATION
   SAE-AMS-QQ-A-250/11 or ASTM B209.

2. 1.6 Ra ALL MACHINED SURFACES PER ANSI/ASME B46.1.

3. SURFACE TREATMENT: CLASS 3 CHEMICAL CONVERSION COATING PER MIL-C-5541: YELLOW/GOLD; USE IRIDITE 14-2 (ref. MACDERMID INC.); APPLY BY BRUSH OR IMMERSION AS APPLICABLE. BRUSH AND/OR SWAB TOUCH UP PER MIL-C-5541 SEC. 3.4; USE IRIDITE 14-2 BRUSH-ON KIT. THE USE OF IRIDITE 14-2 EQUIVALENT(S) IS PROHIBITED UNLESS SPECIFICALLY APPROVED BY ENGINEERING.

4. ELECTROCHEMICAL ETCH DRAWING PART NUMBER 67212MEDH187 ON SPECIFIED SURFACE PER SAE AS478, METHOD 7A (ZONE B4-5).

5. HANDLE WITH CLEAN, LINT-FREE GLOVES.

6. CLEAN SURFACES WITH 190 PROOF ETHYL ALCOHOL. WIPE WITH CLEAN COTTON SWABS AND/OR LINT-FREE CLOTH.

7. BEFORE STORAGE, PROTECT WITH CONTAMINATION BARRIER. USE CLEAN, NEW, TRANSPARENT, POLYETHYLENE BAG FOR SMALL ITEMS, OR 4 MIL THICK MINIMUM POLYETHYLENE SHEET SEALED WITH FIBERGLASS PACKAGING TAPE. SEAL AND MARK WITH IDENTIFICATION NUMBER ON TAG ATTACHED TO BAG.

8. PROCESS PLAN REQUIRED.

9. ESTIMATED WEIGHT: 0.007 Kg.

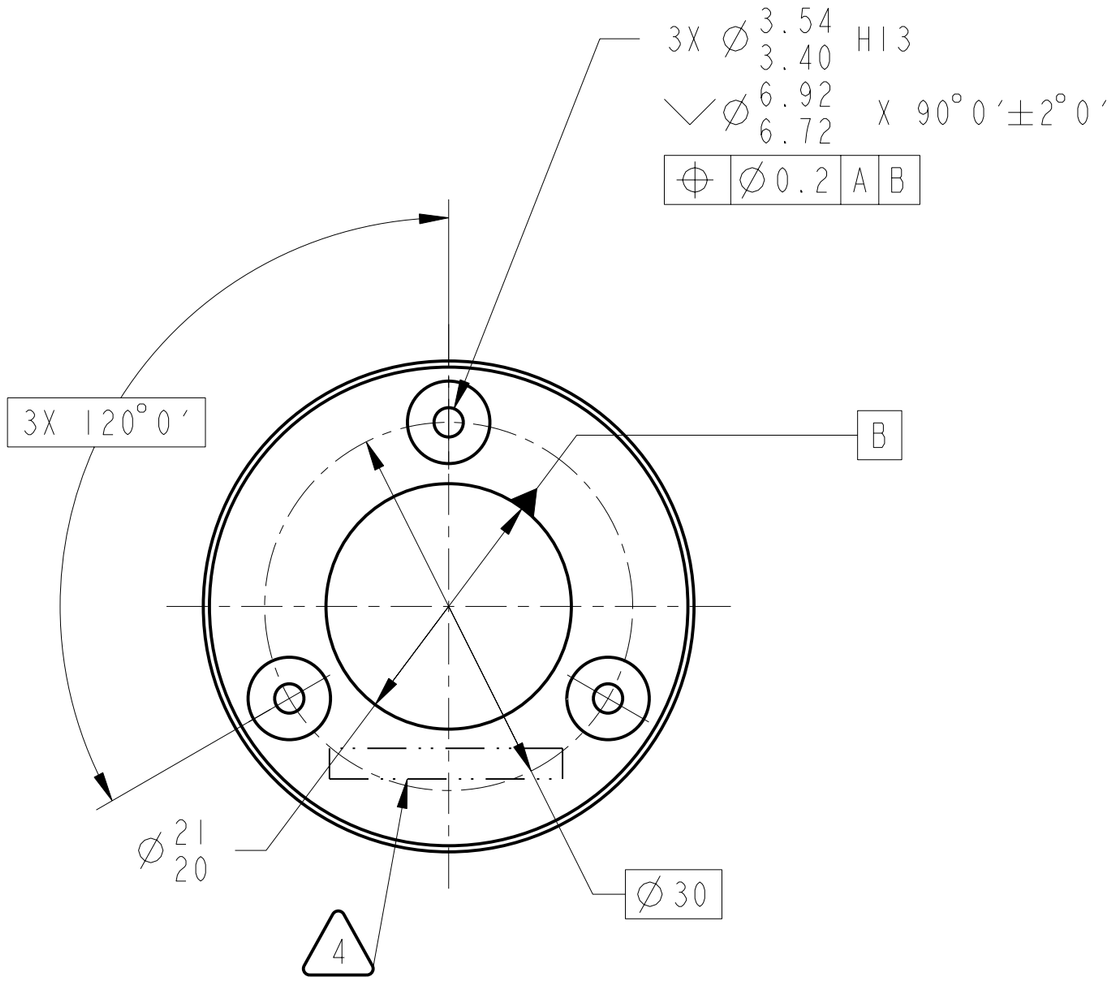

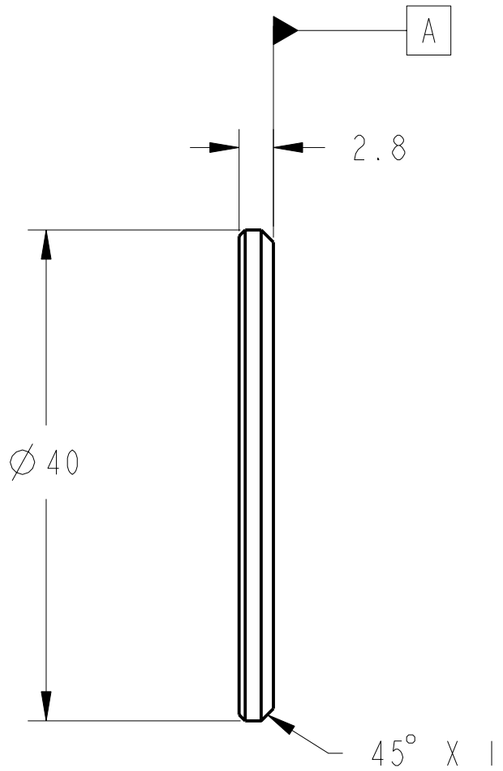

CHG	ZONE	DESCRIPTION	APP/DATE

REVISIONS

AUTHORIZED by CM when under FORMAL Configuration Control

DESIGN CONTRACTOR

THIRD ANGLE PROJECTION

CAD DRAWING DO NOT REVISE MANUALLY

NATIONAL AERONAUTICS AND SPACE ADMINISTRATION
JOHN GLENN RESEARCH CENTER
LEWIS FIELD, CLEVELAND, OHIO

CONTRACT NUMBER: XXX

FEDERAL DATA CORPORATION

UNLESS OTHERWISE SPECIFIED:
1. ALL DIMENSIONS ARE IN MM
2. BREAK EDGES 0.2 - 0.5
3. LINEAR TOLERANCES
   0 TO 6 ± 0.1
   OVER 6 TO 30 ± 0.2
   OVER 30 TO 120 ± 0.3
   OVER 120 TO 315 ± 0.5
   OVER 315 TO 1000 ± 0.8
   OVER 1000 TO 2000 ± 1.2
4. ANGULAR TOLERANCES 0°30′

DRAFTER	M. AYNIK		STRUCTURE	
DESIGNER	M. AYNIK		MAT'L PROC	
REVIEWER			CONFIG MGT	
ENGINEER				

DIMENSIONS AND TOLERANCING PER ASME Y14.5M-1994

PRO/ENGINEER: 2000i
PDM MDL RELEASE LEVEL: RELEASE
PDM MDL REVISION: x.3
MODEL: 67212MEDH187

EMI FILTER COVER PLATE

NEXT ASSY: 67212MEDH152

SIZE	CAGE CODE	DRAWING NUMBER	REV.
A2		67212MEDH187	-
SCALE 2:1		RELEASE DATE XX/XX/XX	SHEET 1 OF 1	UNITS MM

NAME:EDJEN OBJECT:67212MEDH187 DATE:27-Oct-00 16:45:33