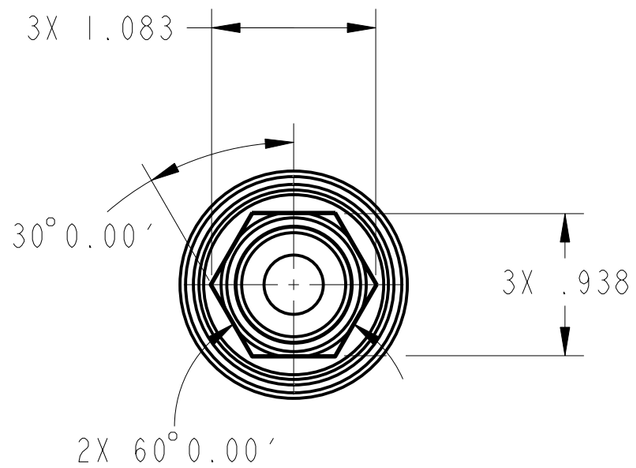

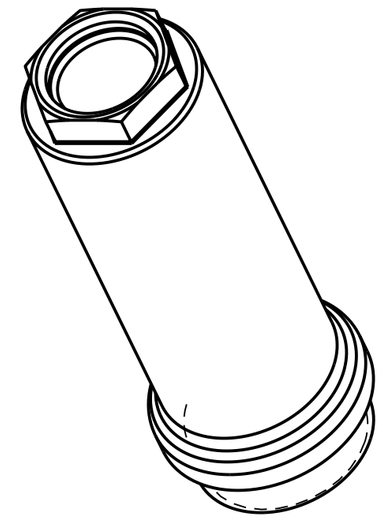

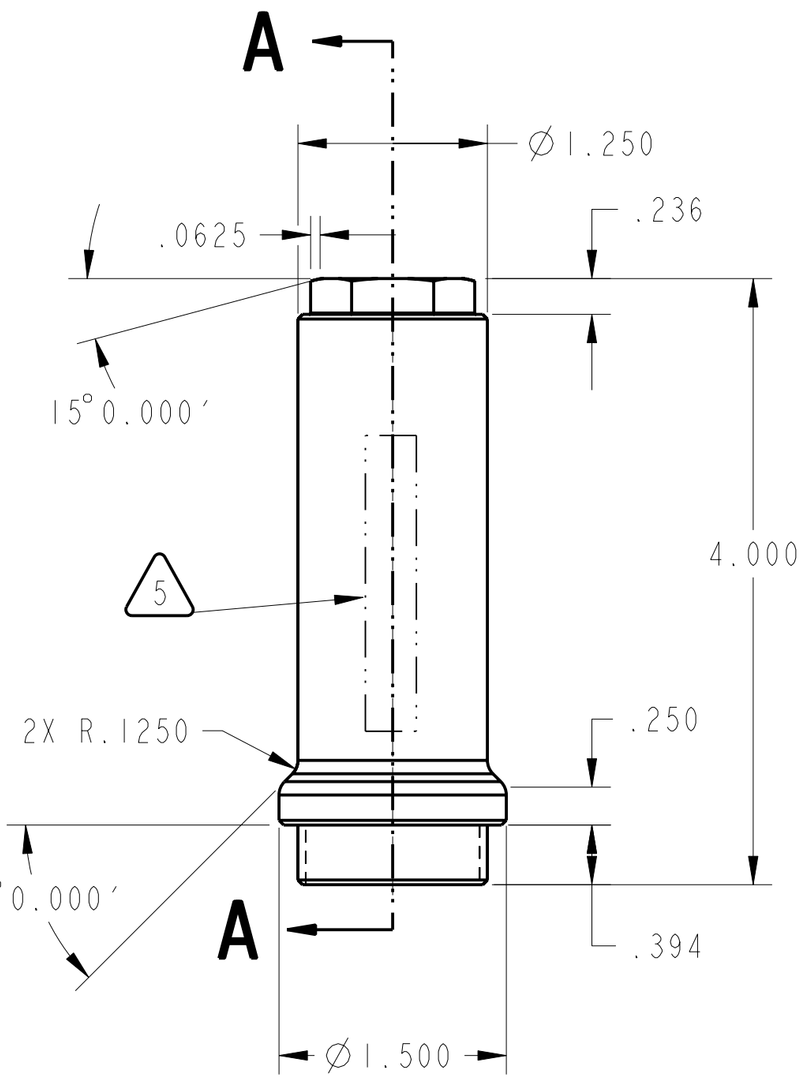

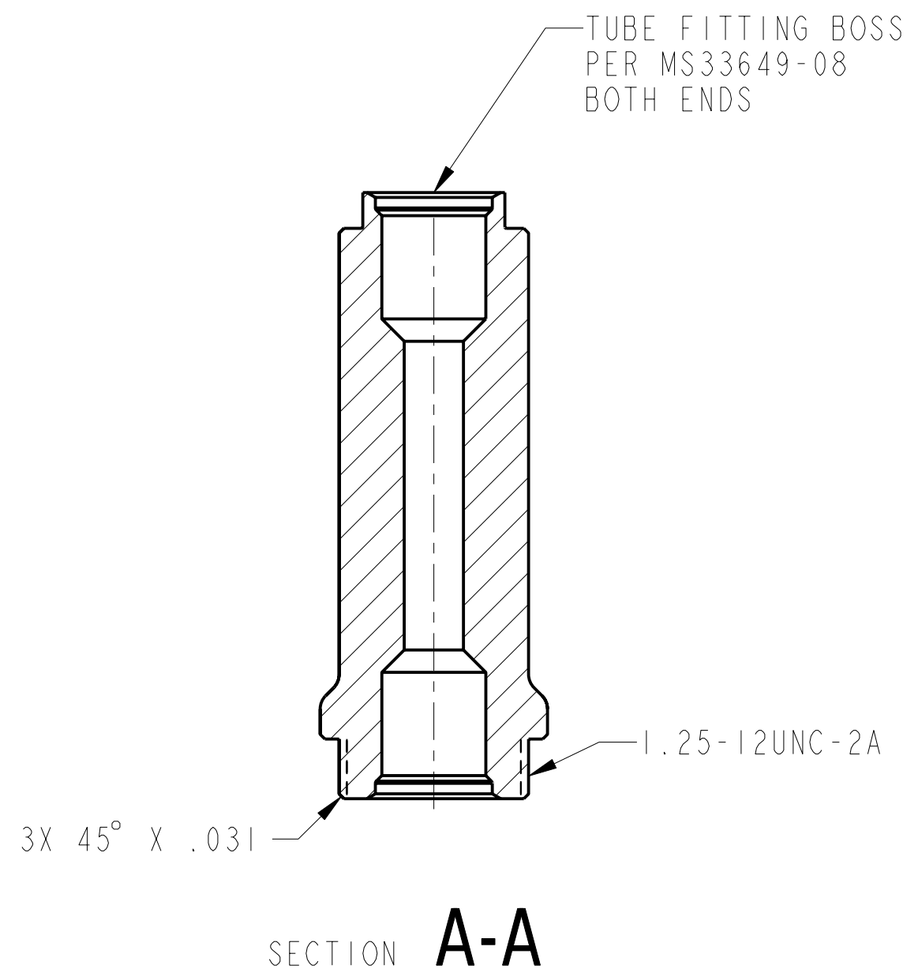

SECTION **A-A**

1. MATERIAL:
   MATERIAL: 6061-T651
   ALUMINUM PER SPECIFICATION
   SAE-AMS-QQ-A-250/11 or ASTM B209.

2. CERTIFICATE OF CONFORMANCE REQUIRED FOR MATERIAL.

3. 1.6 Ra ALL MACHINED SURFACES PER ANSI/ASME B46.1.

4. SURFACE TREATMENT: CLASS 3 CHEMICAL CONVERSION COATING PER MIL-C-5541: YELLOW/GOLD; USE IRIDITE 14-2 (ref. MACDERMID INC.); APPLY BY BRUSH OR IMMERSION AS APPLICABLE. BRUSH AND/OR SWAB TOUCH UP PER MIL-C-5541 SEC. 3.4; USE IRIDITE 14-2 BRUSH-ON KIT. THE USE OF IRIDITE 14-2 EQUIVALENT(S) IS PROHIBITED UNLESS SPECIFICALLY APPROVED BY ENGINEERING.

5. ELECTROCHEMICAL ETCH DRAWING PART NUMBER 67212MEDH186 ON SPECIFIED SURFACE PER SAE AS478, METHOD 7A (ZONE C-B4).

6. HANDLE WITH CLEAN, LINT-FREE GLOVES.

7. CLEAN SURFACES WITH 190 PROOF ETHYL ALCOHOL. WIPE WITH CLEAN COTTON SWABS AND/OR LINT-FREE CLOTH.

8. BEFORE STORAGE, PROTECT WITH CONTAMINATION BARRIER. USE CLEAN, NEW, TRANSPARENT, POLYETHYLENE BAG FOR SMALL ITEMS, OR 4 MIL THICK MINIMUM POLYETHYLENE SHEET SEALED WITH FIBERGLASS PACKAGING TAPE. SEAL AND MARK WITH IDENTIFICATION NUMBER ON TAG ATTACHED TO BAG.

9. PROCESS PLAN REQUIRED.

10. ESTIMATED WEIGHT: 0.404 lbs.

CHG	ZONE	DESCRIPTION	APP/DATE

REVISIONS

PRIOR TO USE VERIFY THE INTENDED PURPOSE IN PDM ("FOR" ATTRIBUTE)

UNLESS OTHERWISE SPECIFIED DIMENSIONS ARE IN INCHES		CONTRACT NAS3-99155 CONTRACTOR ANALEX, INC.	
TOLERANCE ON		TASK ORDER	-
.X	± 0.03	DRAFTER	M. AYNIK
.XX	± 0.01	ENGINEER	M. ROBBIE
.XXX	± 0.005	DESIGNER	M. AYNIK
FRACTION	± -	DIMENSIONING AND TOLERANCING PER ASME Y14.5M-1994	
ANGULAR	± 0.50°		
BREAK EDGES	XXX		

PDM REL LEVEL: **RELEASE** PDM REVISION: **x.3**
PDM DATABASE: **FCF**
MODEL NAME: **67212MEDH186**
CHECK FOR ANY OUTSTANDING ECO'S PRIOR TO USE

NATIONAL AERONAUTICS AND SPACE ADMINISTRATION
JOHN H. GLENN RESEARCH CENTER
LEWIS FIELD
CLEVELAND, OHIO

OPTICS BENCH ASSEMBLY

67212MELH150

1/2" FLUID LINE FEED THRU

SIZE	DRAWING NUMBER	REV	BLDG	AREA
C	67212MEDH186	-	333	-
			UNITS: INCH	
SCALE: 1/1	INITIAL REL DATE XX/XX/XX	SHEET 1 OF 1	DISCIPLINE MECHANICAL	

SIZE C DRAWING NUMBER 67212MEDH186 REV -

PRO/E VERSION: 20.0

NAME: EDJEN OBJECT: 67212MEDH186 DATE: 27-Oct-00 16:45:14