COMMERCIAL PARTS LIST

PART TYPE	BALLOON NO	DESCRIPTION	QTY/ ASSY
C	1	INSERT, KEENSERT, PART NUMBER KNCA0440J (FOR .112-40 INCH FASTENER)	10

1. MATERIAL: 6061-T6 ALUMINUM PER FEDERAL SPEC ASTM B221.
2. SURFACE TREATMENT: CLASS 3 CHEMICAL CONVERSION COATING PER MIL-C-5541: YELLOW/GOLD; USE IRIDITE 14-2 (ref. MACDERMID INC.); APPLY BY BRUSH OR IMMERSION AS APPLICABLE. BRUSH AND/OR SWAB TOUCH UP PER MIL-C-5541 SEC. 3.4; USE IRIDITE 14-2 BRUSH-ON KIT. THE USE OF IRIDITE 14-2 EQUIVALENT(S) IS PROHIBITED UNLESS SPECIFICALLY APPROVED BY ENGINEERING.
3. ETCH DRAWING PART NUMBER 67212MEDH183 ON SPECIFIED SURFACE, PER SAE AS478, (ZONE E4).
4. INSTALL KEENSERT NO. KNCA0440J INCH PER MANUFACTURER'S SPECIFICATIONS AFTER SURFACE TREATMENT PER NOTE 2.

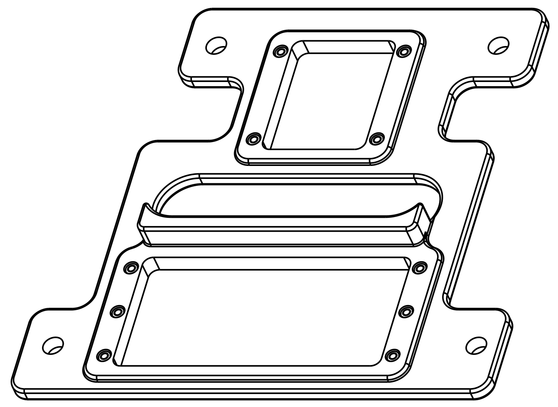

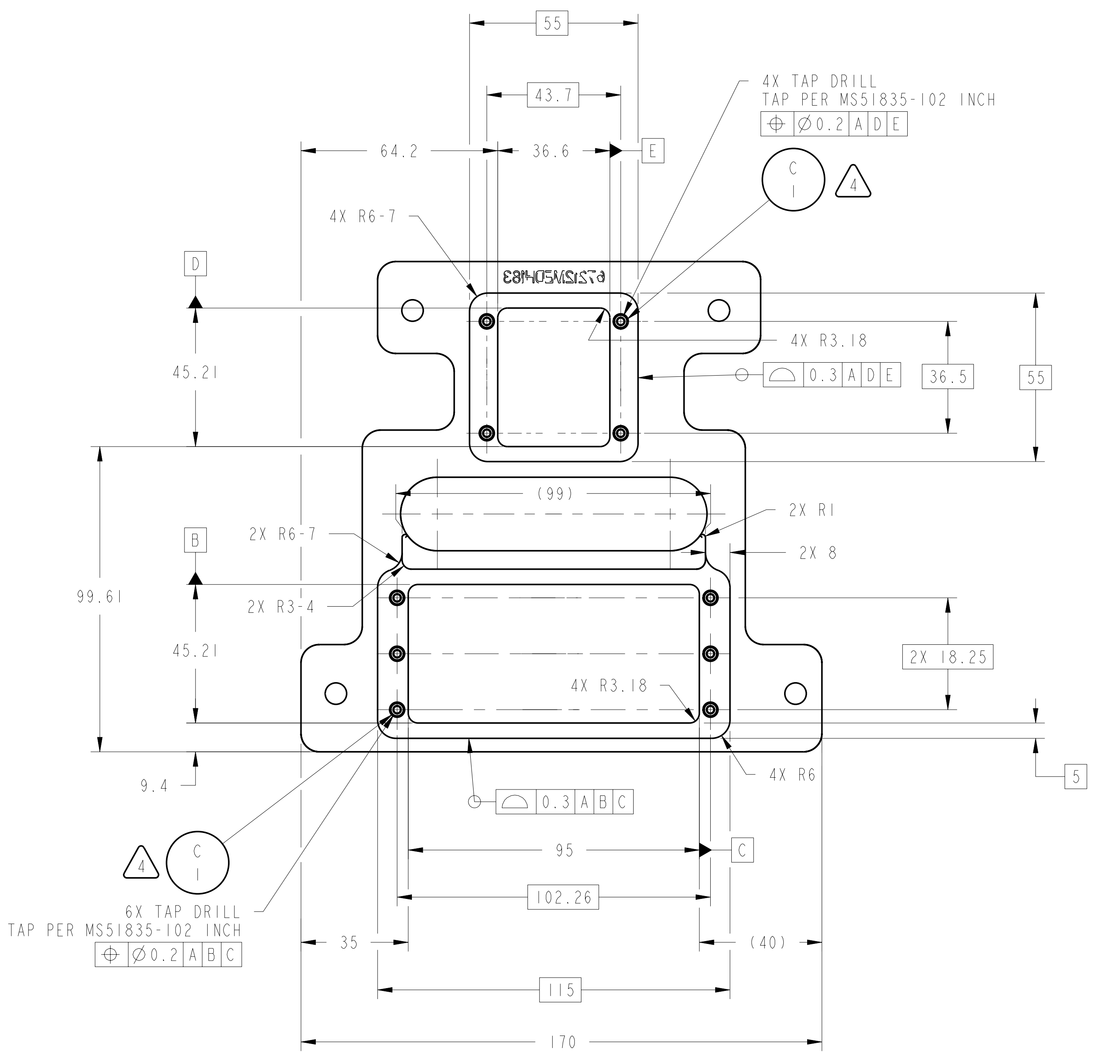

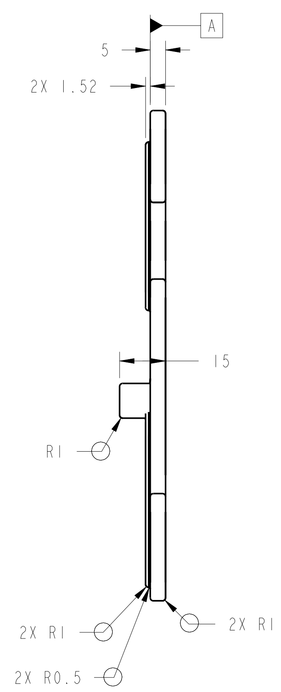

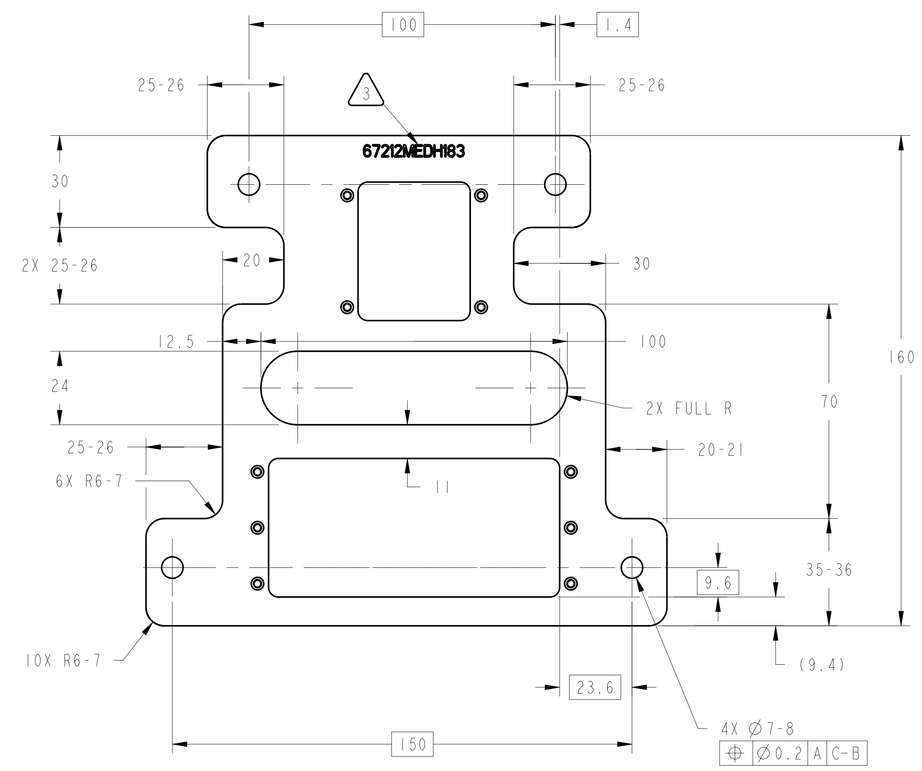

CHG	ZONE	DESCRIPTION	APP/DATE

REVISIONS

UNLESS OTHERWISE SPECIFIED:
1. ALL DIMENSIONING AND TOLERANCING PER ASME Y14.5M-1994
2. ALL DIMENSIONS ARE IN MILLIMETERS
3. BREAK EDGES: 0.2-0.5
4. LINEAR TOLERANCES:
   0.5-6 ±0.1
   OVER 6-30 ±0.2
   OVER 30- 120 ±0.3
   OVER 120-315 ±0.5
   OVER 315-1000 ±0.8
   OVER 1000-2000 ±1.2
5. ANGULAR TOLERANCES: 0° 30'

CONTRACT NAS3-99155
CONTRACTOR ANALEX, INC.
TASK ORDER XXX
DRAFTER M. AYNIK
ENGINEER M. ROBBIE
DESIGNER M. AYNIK

THIRD ANGLE PROJECTION

NATIONAL AERONAUTICS AND SPACE ADMINISTRATION
JOHN H. GLENN RESEARCH CENTER
LEWIS FIELD
CLEVELAND, OHIO

OPTICS BENCH ASSEMBLY
67212MELH150

FCU ELECTRICAL CONNECTION ADAPTER PLATE

PDM REL LEVEL: RELEASE PDM REVISION: x.7
PDM DATABASE: FCF
MODEL NAME: 67212MEDH183
PRIOR TO USE VERIFY THE INTENDED PURPOSE IN PDM ("FOR" ATTRIBUTE)

SIZE	DRAWING NUMBER	REV	BLDG	AREA
A0	67212MEDH183	-	333	-

SCALE: 1:1 | INITIAL REL DATE 08/21/00 | SHEET 1 OF 1 | UNITS: mm | DISCIPLINE MECHANICAL

PRO/E VERSION: 2000i

SIZE A0 DRAWING NUMBER 67212MEDH183 REV -

NAME:EDJEN OBJECT:67212MEDH183 DATE:27-Oct-00 16:44:10