COMMERCIAL PARTS LIST

PART TYPE	BALLOON NO	DESCRIPTION	QTY/ ASSY
C	1	INSERT, SCREW THREAD KEY LOCKED, 304 STAINLESS STEEL LIGHTWEIGHT, METRIC NA0145-060 (FOR M6 X 1 FASTENER)	2

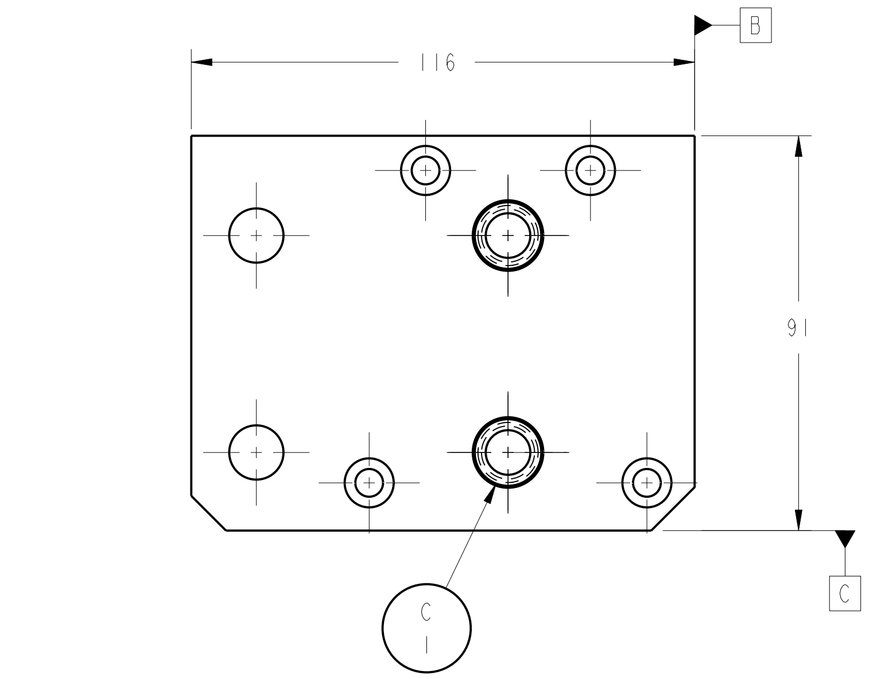

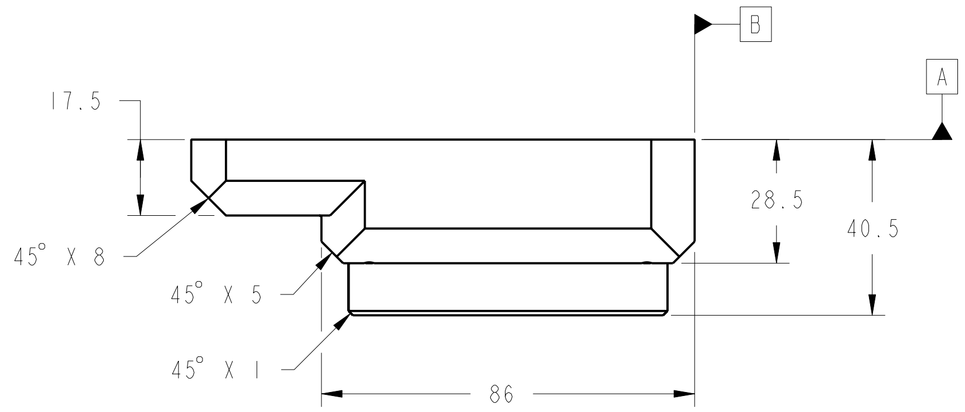

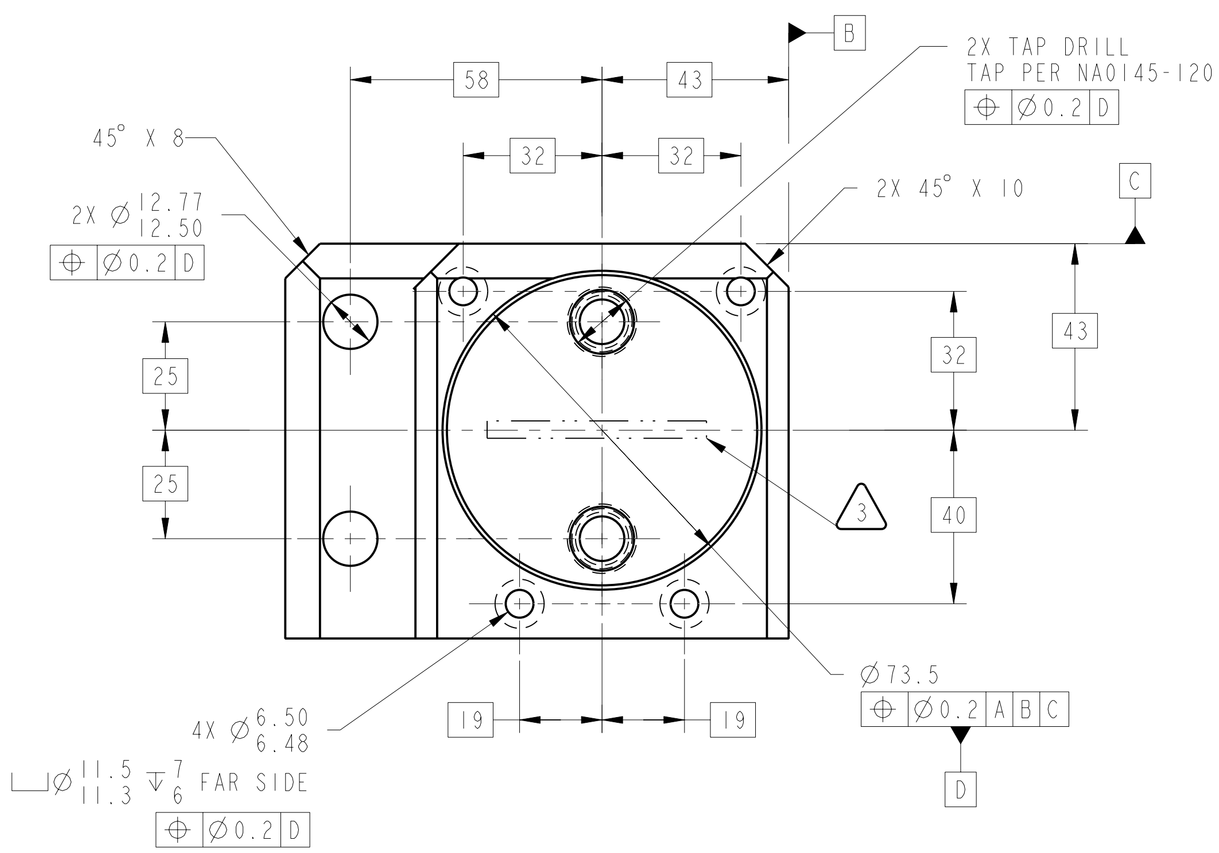

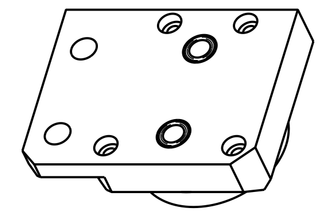

SCALE 1:2
(TANGENT LINES SHOWN
FOR CLARITY)

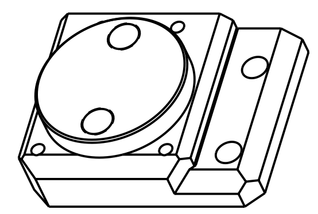

SCALE 1:2
(TANGENT LINES SHOWN
FOR CLARITY)

1. MATERIAL: 6061-T6 ALUMINUM PER FEDERAL SPEC ASTM B221.
2. SURFACE TREATMENT PER MIL-C-5541, CLASS 3. USE IRIDITE 14.2 OR REQUESTER APPROVED EQUAL PER MIL-C-81706, CLASS 3, FORM 11, METHOD B OR C AS APPLICABLE. SPOT TOUCH UP BY METHOD B.
3. ETCH DRAWING PART NUMBER 67212MEDH179 ON SPECIFIED SURFACE, PER SAE AS478, (ZONE B6).

CHG	ZONE	DESCRIPTION	APP/DATE

REVISIONS

UNLESS OTHERWISE SPECIFIED:
1. ALL DIMENSIONING AND TOLERANCING PER ASME Y14.5M-1994
2. ALL DIMENSIONS ARE IN MILLIMETERS
3. BREAK EDGES: 0.2-0.5
4. LINEAR TOLERANCES:
   0.5-6 ±0.1
   OVER 6-30 ±0.2
   OVER 30- 120 ±0.3
   OVER 120-315 ±0.5
   OVER 315-1000 ±0.8
   OVER 1000-2000 ±1.2
5. ANGULAR TOLERANCES: 0° 30′

CONTRACT	NAS3-99155
CONTRACTOR	XXX
TASK ORDER	XXX
DRAFTER	M. AYNIK
ENGINEER	M. ROBBIE
DESIGNER	M. AYNIK

THIRD ANGLE PROJECTION

NATIONAL AERONAUTICS AND SPACE ADMINISTRATION
JOHN H. GLENN RESEARCH CENTER
LEWIS FIELD
CLEVELAND, OHIO

OPTICS BENCH ASSEMBLY

67212MELH150

LOWER RATCHET PIN FILLER PLATE, LEFT

PDM REL LEVEL: PDM REVISION:
PDM DATABASE:
MODEL NAME: 67212MEDH179
PRIOR TO USE VERIFY THE INTENDED PURPOSE IN PDM ("FOR" ATTRIBUTE)

SIZE	DRAWING NUMBER	REV	BLDG	AREA
A1	67212MEDH179	-	333	-
			UNITS: mm	
SCALE: 1:1	INITIAL REL DATE XX/XX/XXXX	SHEET 1 OF 1	DISCIPLINE MECHANICAL	

DRAWING NUMBER 67212MEDH179
SIZE A1
REV -

PRO/E VERSION: 2000i

NAME:EDJEN OBJECT:67212MEDH179 DATE:27-Oct-00 16:42:54