DRAWING LIST

PART TYPE	BALLOON NO	DRAWING NUMBER	DESCRIPTION	QTY/ ASSY
	H178	67212MEDH178	RATCHET PIN FILLER PLATE, RIGHT (MIRROR OF 67212MEDH177)	1

COMMERCIAL PARTS LIST

PART TYPE	BALLOON NO	DESCRIPTION	QTY/ ASSY
C	1	INSERT, SCREW THREAD KEY LOCKED, 304 STAINLESS STEEL LIGHTWEIGHT, METRIC NA0145-060 (FOR M6 X 1 FASTENER)	2
C	2	ACME STANDARD METRIC BUSHING HEAD LINER. PART NUMBER: HM-12-10-8.00	1

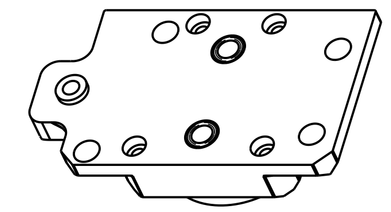

SCALE 1:2

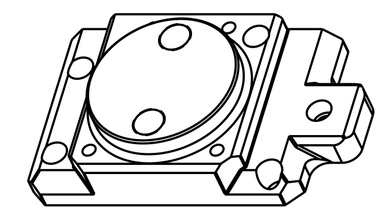

SCALE 1:2

1. MATERIAL: 6061-T6 ALUMINUM PER FEDERAL SPEC ASTM B221.
2. SURFACE TREATMENT PER MIL-C-5541, CLASS 3. USE IRIDITE 14.2 OR REQUESTER APPROVED EQUAL PER MIL-C-81706, CLASS 3, FORM II, METHOD B OR C AS APPLICABLE. SPOT TOUCH UP BY METHOD B.
3. ETCH DRAWING PART NUMBER 67212MEDH178 ON SPECIFIED SURFACE, PER SAE AS478, (ZONE B6).

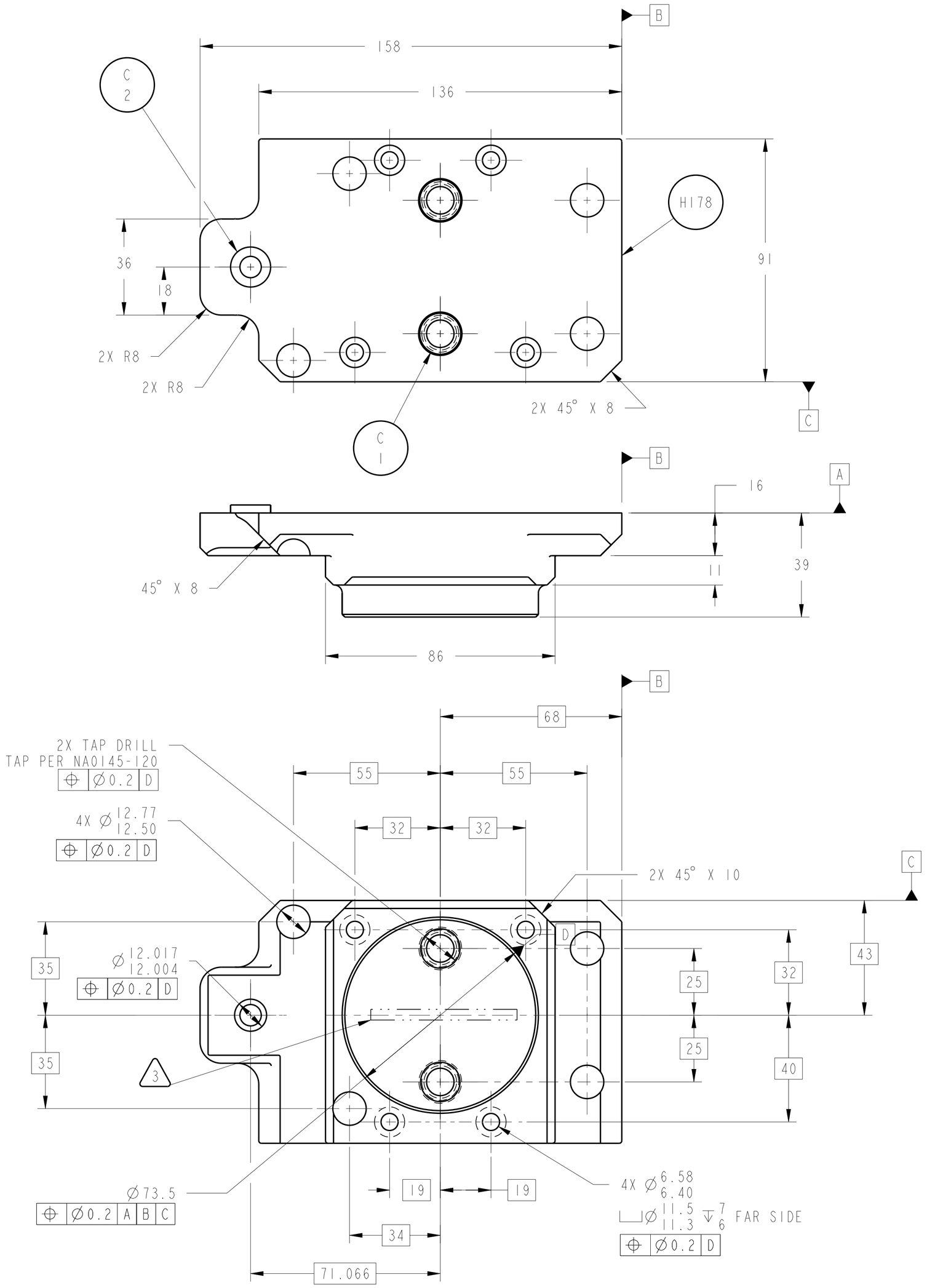

CHG	ZONE	DESCRIPTION	APP/DATE

REVISIONS

UNLESS OTHERWISE SPECIFIED:

1. ALL DIMENSIONING AND TOLERANCING PER ASME Y14.5M-1994
2. ALL DIMENSIONS ARE IN MILLIMETERS
3. BREAK EDGES: 0.2-0.5
4. LINEAR TOLERANCES:
   0.5-6 ±0.1
   OVER 6-30 ±0.2
   OVER 30-120 ±0.3
   OVER 120-315 ±0.5
   OVER 315-1000 ±0.8
   OVER 1000-2000 ±1.2
5. ANGULAR TOLERANCES: 0° 30′

CONTRACT	NAS3-99155
CONTRACTOR	ANALEX, INC.
TASK ORDER	XXX
DRAFTER	M. AYNIK
ENGINEER	M. ROBBIE
DESIGNER	M. AYNIK

THIRD ANGLE PROJECTION

NATIONAL AERONAUTICS AND SPACE ADMINISTRATION
JOHN H. GLENN RESEARCH CENTER
LEWIS FIELD
CLEVELAND, OHIO

OPTICS BENCH ASSEMBLY

67212MELH150

RATCHET PIN FILLER PLATE, RIGHT
(MIRROR OF 67212MEDH177)

PDM REL LEVEL: PDM REVISION:

PDM DATABASE:

MODEL NAME: 67212MEDH178

PRIOR TO USE VERIFY THE INTENDED PURPOSE IN PDM ("FOR" ATTRIBUTE)

SIZE	DRAWING NUMBER	REV	BLDG	AREA
A1	67212MEDH178	-	333	-
			UNITS: mm	
SCALE: 1:1	INITIAL REL DATE XX/XX/XXXX	SHEET 1 OF 1	DISCIPLINE MECHANICAL	

SIZE A1 DRAWING NUMBER 67212MEDH178 REV -

PRO/E VERSION: 2000i

NAME:EDJEN OBJECT:67212MEDH178 DATE:27-Oct-00 16:42:33