COMMERCIAL PARTS LIST

PART TYPE	BALLOON NO	DESCRIPTION	QTY/ ASSY
C	1	INSERT, KEENSERT, PART NUMBER KNML 6X1.0 (FOR M6 X 1 FASTENER)	5

1. MATERIAL: 6061-T6 ALUMINUM PER FEDERAL SPEC ASTM B221.
2. SURFACE TREATMENT PER MIL-C-5541, CLASS 3. USE IRIDITE 14.2 OR REQUESTER APPROVED EQUAL PER MIL-C-81706, CLASS 3, FORM 11, METHOD B OR C AS APPLICABLE. SPOT TOUCH UP BY METHOD B.
3. ETCH DRAWING PART NUMBER 67212MEDH173 ON SPECIFIED SURFACE, PER SAE AS478, (ZONE C7).

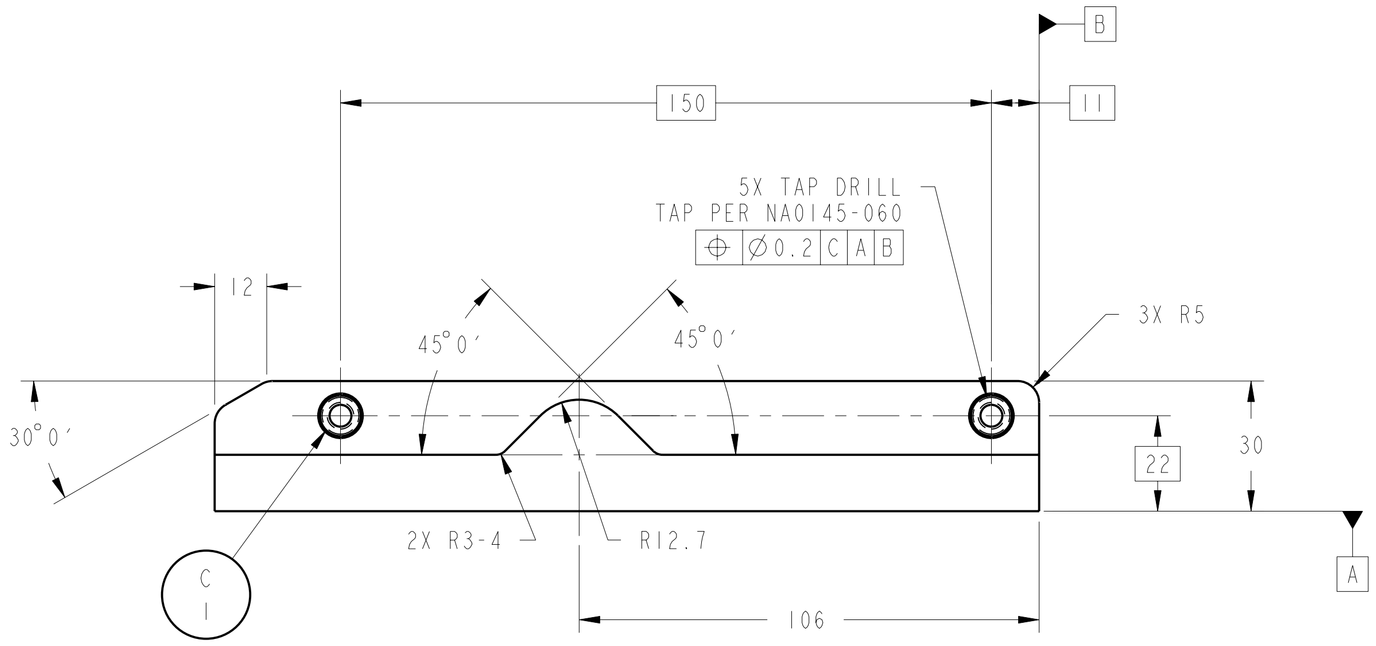

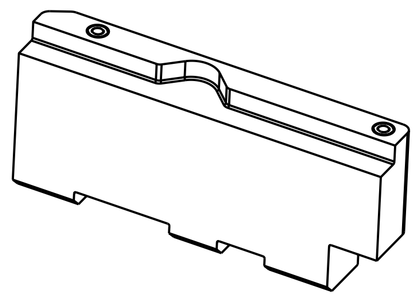

SCALE 1:2
(TANGENT LINES SHOWN FOR CLARITY)

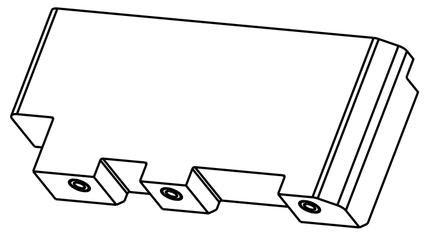

SCALE 1:2
(TANGENT LINES SHOWN FOR CLARITY)

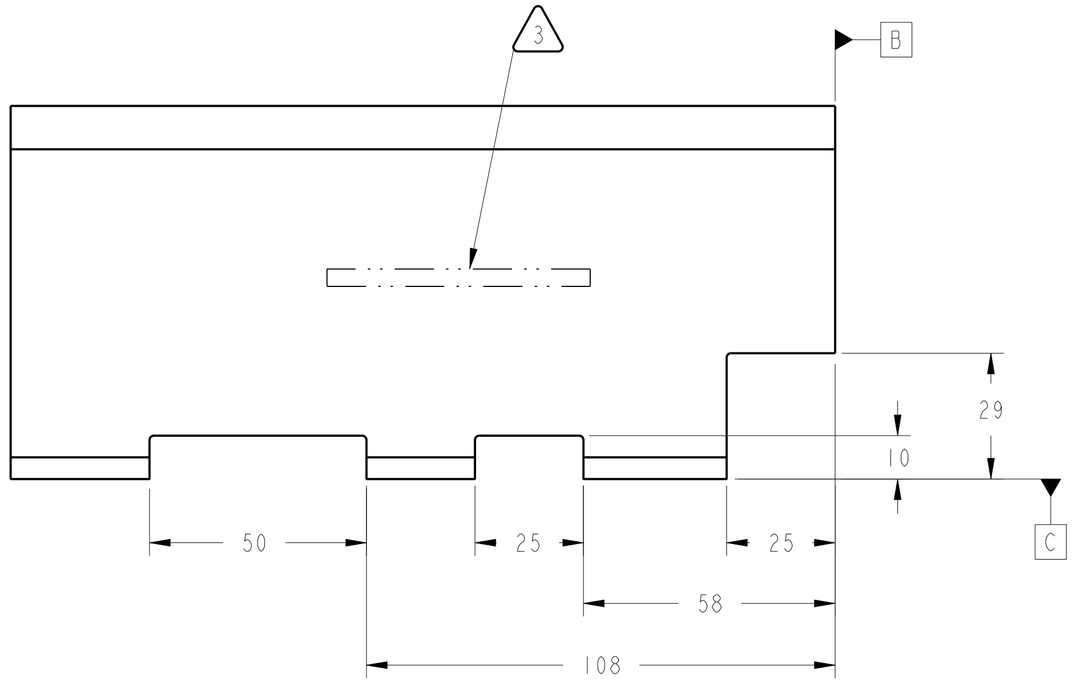

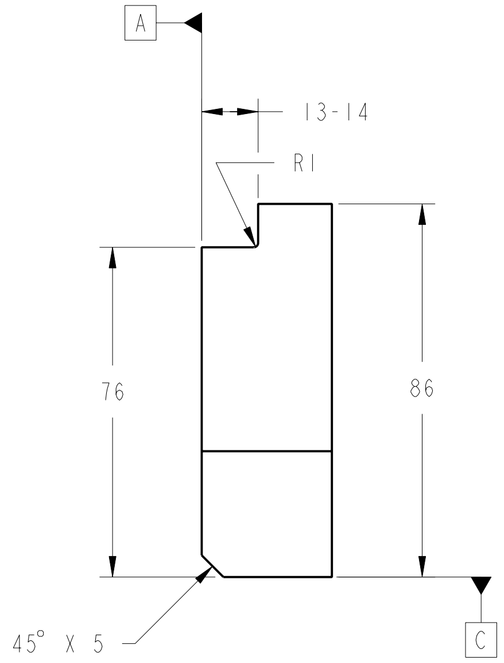

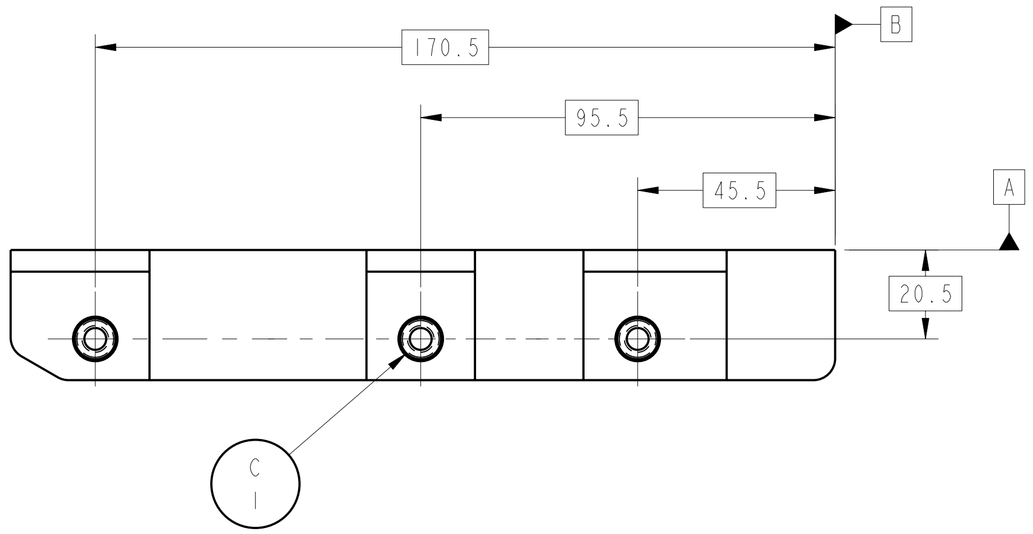

UNLESS OTHERWISE SPECIFIED:

1. ALL DIMENSIONING AND TOLERANCING PER ASME Y14.5M-1994
2. ALL DIMENSIONS ARE IN MILLIMETERS
3. BREAK EDGES: 0.2-0.5
4. LINEAR TOLERANCES:
   - 0.5-6 ±0.1
   - OVER 6-30 ±0.2
   - OVER 30- 120 ±0.3
   - OVER 120-315 ±0.5
   - OVER 315-1000 ±0.8
   - OVER 1000-2000 ±1.2
5. ANGULAR TOLERANCES: 0° 30′

CONTRACT	NAS3-99155
CONTRACTOR	ANALEX, INC.
TASK ORDER	XXX
DRAFTER	M. AYNIK
ENGINEER	M. ROBBIE
DESIGNER	M. AYNIK

THIRD ANGLE PROJECTION

CHG	ZONE	DESCRIPTION	APP/DATE

REVISIONS

NATIONAL AERONAUTICS AND SPACE ADMINISTRATION
JOHN H. GLENN RESEARCH CENTER
LEWIS FIELD
CLEVELAND, OHIO

OPTICS BENCH ASSEMBLY

67212MELH150

MANUAL VALVE SUPPORT

PDM REL LEVEL: **RELEASE** PDM REVISION: **x.2+**

PDM DATABASE: **FCF**

MODEL NAME: **67212MEDH173**

PRIOR TO USE VERIFY THE INTENDED PURPOSE IN PDM ("FOR" ATTRIBUTE)

SIZE	DRAWING NUMBER	REV	BLDG	AREA
A1	67212MEDH173	-	333	-

UNITS: mm

SCALE:	INITIAL REL DATE	SHEET	DISCIPLINE
1:1	XX/XX/XXXX	1 OF 1	MECHANICAL

PRO/E VERSION: 2000i

SIZE A1 DRAWING NUMBER 67212MEDH173 REV -

NAME:EDJEN OBJECT:67212MEDH173 DATE:27-Oct-00 16:37:17