COMMERCIAL PARTS LIST

PART TYPE	BALLOON NO	DESCRIPTION	QTY/ ASSY
C	1	INSERT, KEENSERT, PART NUMBER KNML 6X1.0 (FOR M6 X 1 FASTENER)	3

1. MATERIAL: 6061-T6 ALUMINUM PER FEDERAL SPEC ASTM B221.
2. SURFACE TREATMENT: CLASS 3 CHEMICAL CONVERSION COATING PER MIL-C-5541: YELLOW/GOLD; USE IRIDITE 14-2 (ref. MACDERMID INC.); APPLY BY BRUSH OR IMMERSION AS APPLICABLE. BRUSH AND/OR SWAB TOUCH UP PER MIL-C-5541 SEC. 3.4; USE IRIDITE 14-2 BRUSH-ON KIT. THE USE OF IRIDITE 14-2 EQUIVALENT(S) IS PROHIBITED UNLESS SPECIFICALLY APPROVED BY ENGINEERING.
3. ETCH DRAWING PART NUMBER 67212MEDH161 ON SPECIFIED SURFACE, PER SAE AS478, (ZONE C7).
4. INSTALL KEENSERT NO. KNML 6X1.0 INCH PER MANUFACTURER'S SPECIFICATIONS AFTER SURFACE TREATMENT PER NOTE 2.

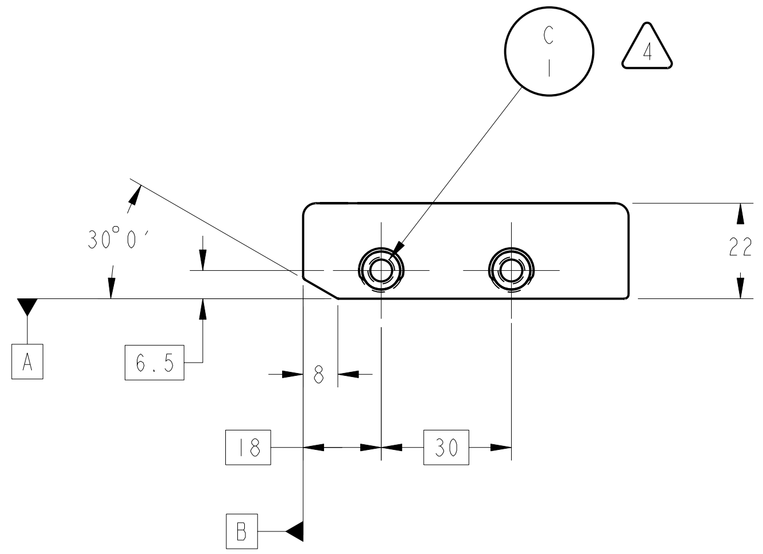

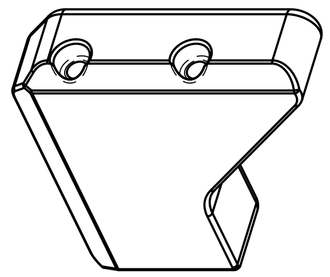

(TANGENT LINES SHOWN FOR CLARITY)

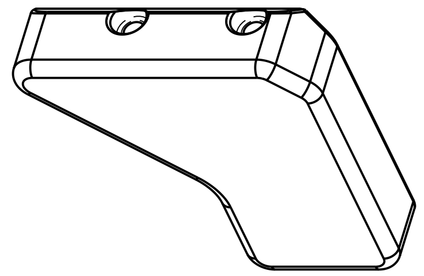

(TANGENT LINES SHOWN FOR CLARITY)

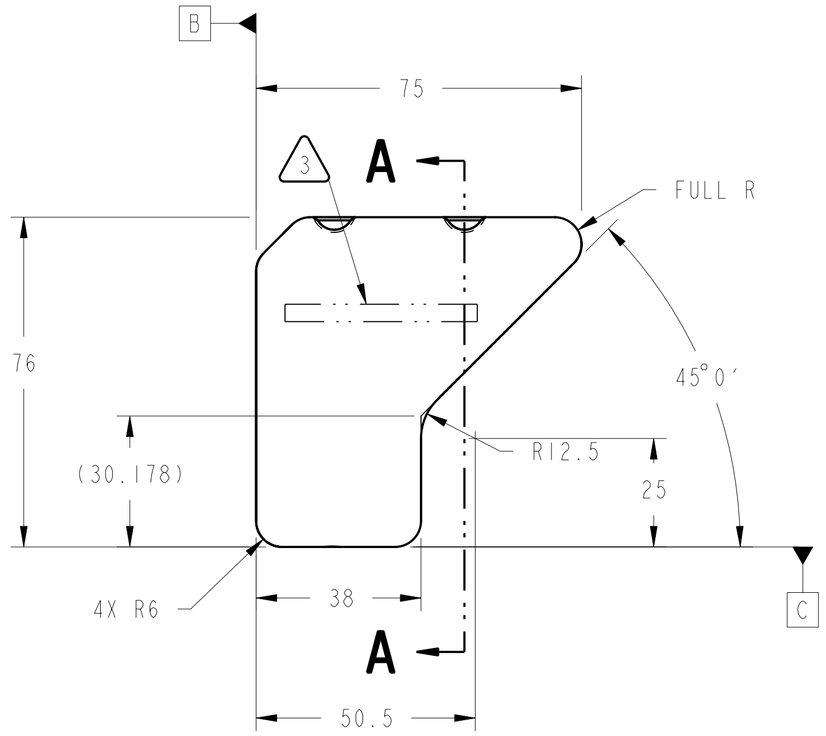

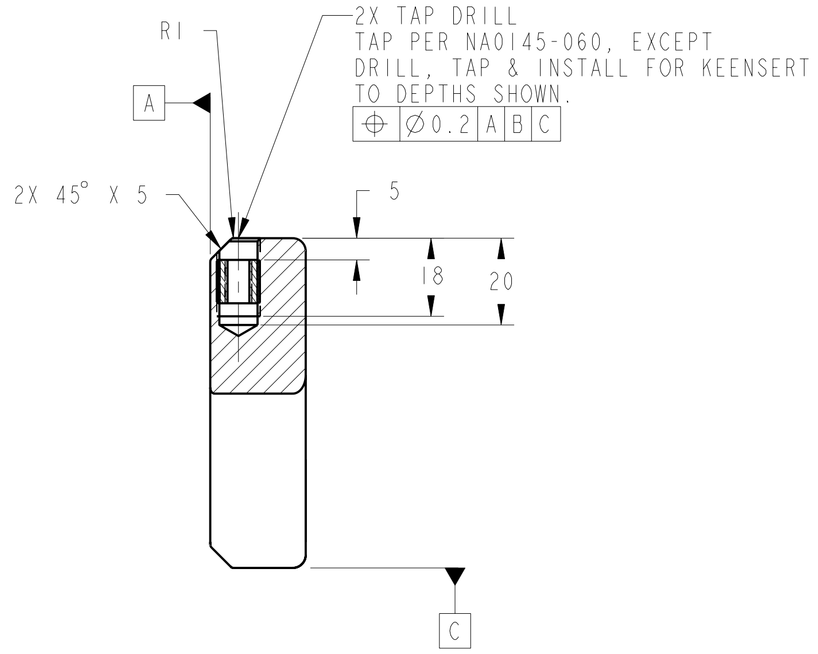

SECTION **A-A**

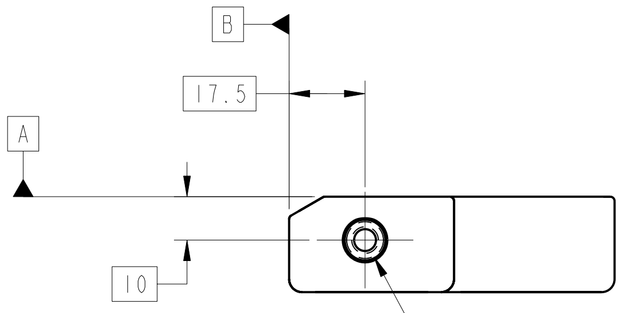

TAP DRILL
TAP PER NA0145-060
⌖ Ø0.2 C A B

CHG	ZONE	DESCRIPTION	APP/DATE

REVISIONS

UNLESS OTHERWISE SPECIFIED:
1. ALL DIMENSIONING AND TOLERANCING PER ASME Y14.5M-1994
2. ALL DIMENSIONS ARE IN MILLIMETERS
3. BREAK EDGES: 0.2-0.5
4. LINEAR TOLERANCES:
   0.5-6 ±0.1
   OVER 6-30 ±0.2
   OVER 30-120 ±0.3
   OVER 120-315 ±0.5
   OVER 315-1000 ±0.8
   OVER 1000-2000 ±1.2
5. ANGULAR TOLERANCES: 0° 30′

CONTRACT	NAS3-99155
CONTRACTOR	ANALEX, INC.
TASK ORDER	XXX
DRAFTER	M. AYNIK
ENGINEER	M. ROBBIE
DESIGNER	M. AYNIK

THIRD ANGLE PROJECTION

NATIONAL AERONAUTICS AND SPACE ADMINISTRATION
JOHN H. GLENN RESEARCH CENTER
LEWIS FIELD
CLEVELAND, OHIO

OPTICS BENCH ASSEMBLY
67212MELH150

EXHAUST MANIFOLD
GUSSET 4
(MIRROR OF 67212MEDH159)

PDM REL LEVEL: **RELEASE** PDM REVISION: **x.3**
PDM DATABASE: **FCF**
MODEL NAME: **67212MEDH161**
PRIOR TO USE VERIFY THE INTENDED PURPOSE IN PDM ("FOR" ATTRIBUTE)

SIZE	DRAWING NUMBER	REV	BLDG	AREA
A1	67212MEDH161	-	333	-
			UNITS: mm	
SCALE: 1:1	INITIAL REL DATE 08/24/00	SHEET 1 OF 1	DISCIPLINE MECHANICAL	

PRO/E VERSION: 2000i

SIZE A1 DRAWING NUMBER 67212MEDH161 REV -

NAME:EDJEN OBJECT:67212MEDH161 DATE:27-Oct-00 16:08:51