COMMERCIAL PARTS LIST

PART TYPE	BALLOON NO	DESCRIPTION	QTY/ ASSY
C	1	INSERT, KEENSERT, PART NUMBER KNML 6X1.0 (FOR M6 X 1 FASTENER)	3

1. MATERIAL: 6061-T6 ALUMINUM PER FEDERAL SPEC ASTM B221.
2. SURFACE TREATMENT PER MIL-C-5541, CLASS 3. USE IRIDITE 14.2 OR REQUESTER APPROVED EQUAL PER MIL-C-81706, CLASS 3, FORM 11, METHOD B OR C AS APPLICABLE. SPOT TOUCH UP BY METHOD B.
3. ETCH DRAWING PART NUMBER 67212MEDH160 ON SPECIFIED SURFACE, PER SAE AS478, (ZONE A5).

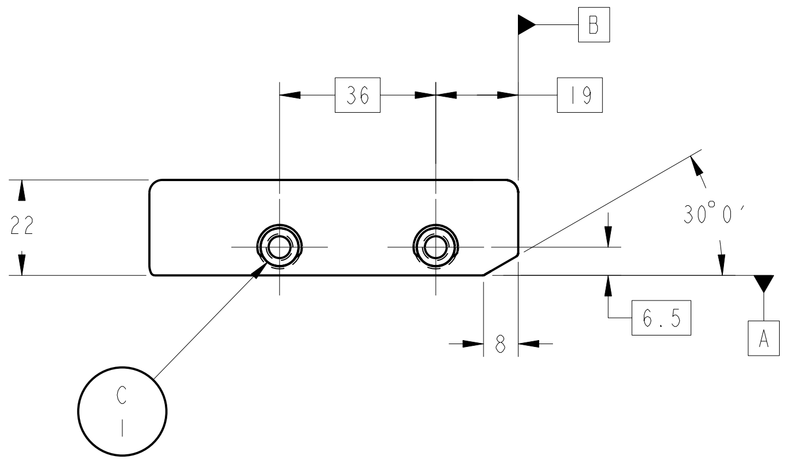

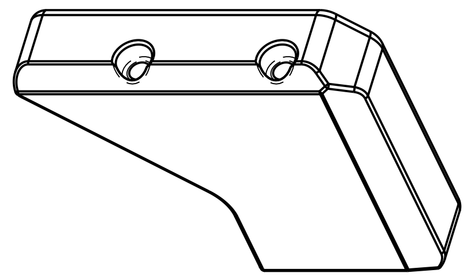

(TANGENT LINES SHOWN FOR CLARITY)

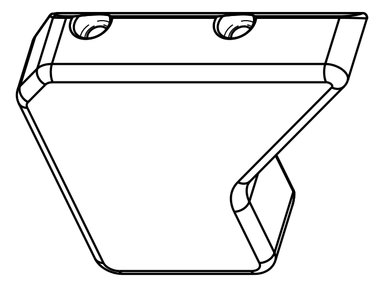

(TANGENT LINES SHOWN FOR CLARITY)

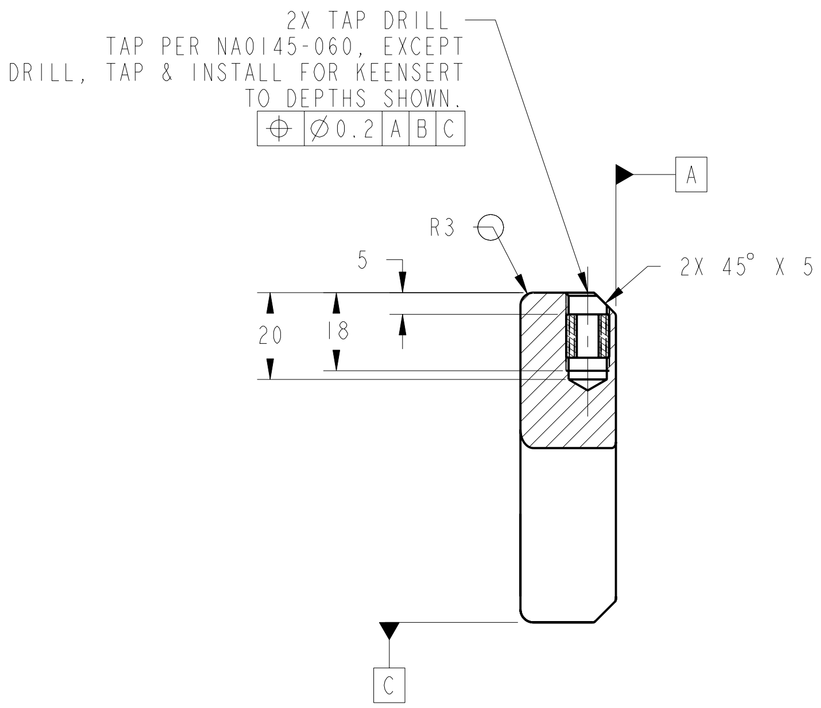

SECTION **A-A**

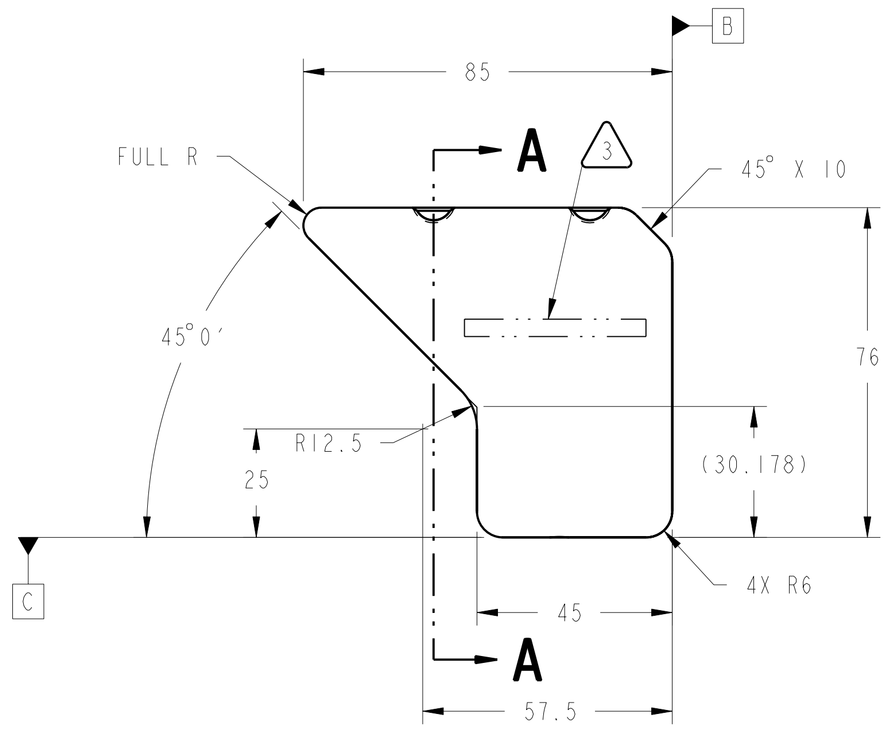

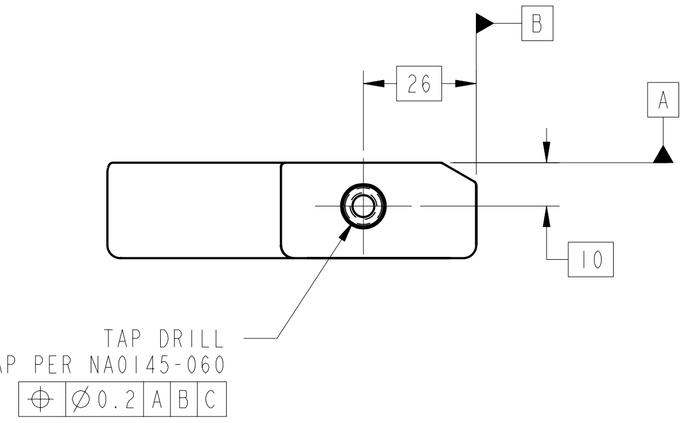

CHG	ZONE	DESCRIPTION	APP/DATE

REVISIONS

UNLESS OTHERWISE SPECIFIED:
1. ALL DIMENSIONING AND TOLERANCING PER ASME Y14.5M-1994
2. ALL DIMENSIONS ARE IN MILLIMETERS
3. BREAK EDGES: 0.2-0.5
4. LINEAR TOLERANCES:
   0.5-6 ±0.1
   OVER 6-30 ±0.2
   OVER 30- 120 ±0.3
   OVER 120-315 ±0.5
   OVER 315-1000 ±0.8
   OVER 1000-2000 ±1.2
5. ANGULAR TOLERANCES: 0° 30′

CONTRACT	NAS3-99155
CONTRACTOR	ANALEX, INC.
TASK ORDER	XXX
DRAFTER	M. AYNIK
ENGINEER	M. ROBBIE
DESIGNER	M. AYNIK

THIRD ANGLE PROJECTION

NATIONAL AERONAUTICS AND SPACE ADMINISTRATION
JOHN H. GLENN RESEARCH CENTER
LEWIS FIELD
CLEVELAND, OHIO

OPTICS BENCH ASSEMBLY
67212MELH150

EXHAUST MANIFOLD
GUSSET 3

PDM REL LEVEL: PDM REVISION:
PDM DATABASE:
MODEL NAME: 67212MEDH160
PRIOR TO USE VERIFY THE INTENDED PURPOSE IN PDM ("FOR" ATTRIBUTE)

SIZE	DRAWING NUMBER	REV	BLDG	AREA
A1	67212MEDH160	-	333	-
			UNITS: mm	
SCALE: 1:1	INITIAL REL DATE XX/XX/XXXX	SHEET 1 OF 1	DISCIPLINE MECHANICAL	

PRO/E VERSION: 2000i

DRAWING NUMBER 67212MEDH160 SIZE A1 REV -

NAME:EDJEM OBJECT:67212MEDH160 DATE:27-Oct-00 16:07:33