COMMERCIAL PARTS LIST

PART TYPE	BALLOON NO	DESCRIPTION	QTY/ ASSY
C	1	INSERT, KEENSERT, PART NUMBER KNML 5X0.8 (FOR M5 X 0.8 FASTENER)	2

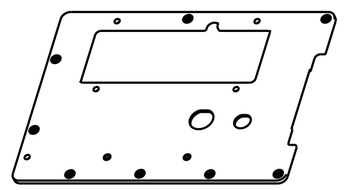

SCALE 1:5
(TANGENT LINES SHOWN FOR CLARITY)

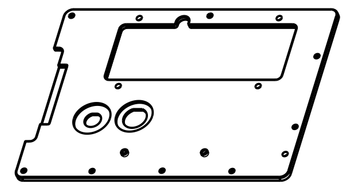

SCALE 1:5
(TANGENT LINES SHOWN FOR CLARITY)

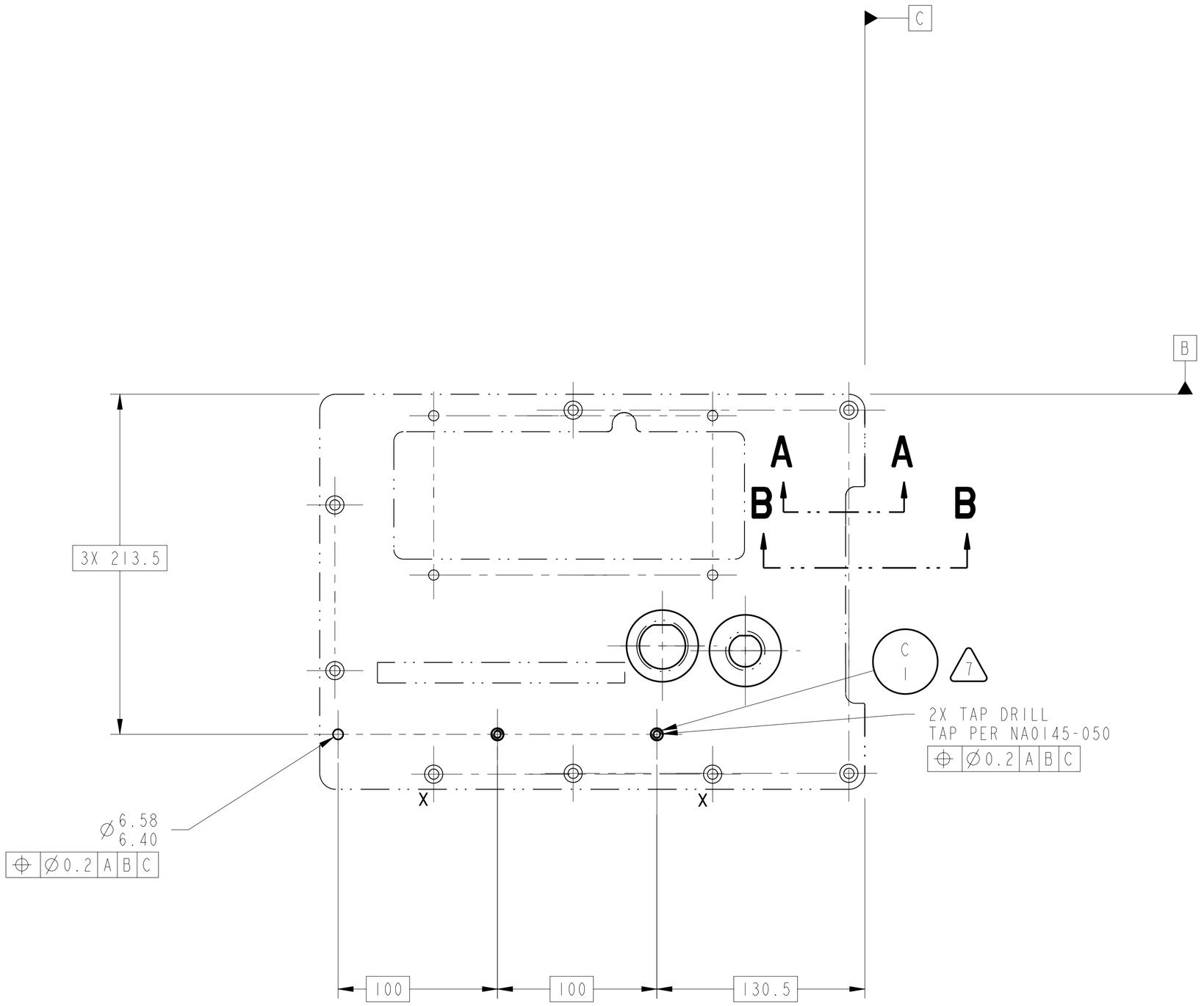

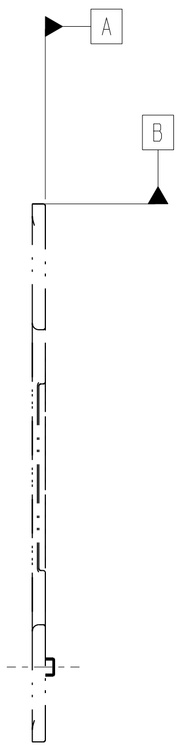

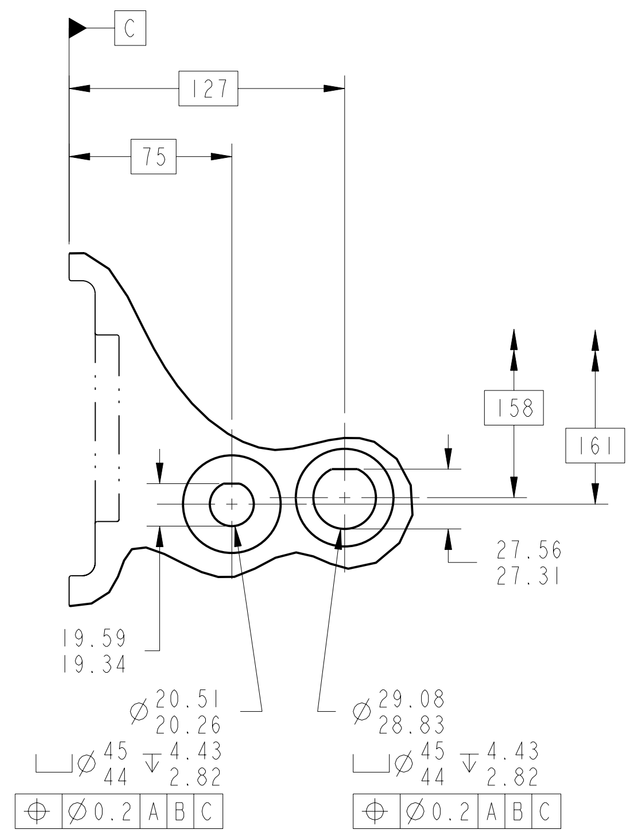

1. MATERIAL:
   MATERIAL: 6061-T651
   ALUMINUM PER SPECIFICATION
   SAE-AMS-QQ-A-250/11 or ASTM B209.
2. CERTIFICATE OF CONFORMANCE REQUIRED FOR MATERIAL.
3. 1.6 Ra ALL MACHINED SURFACES PER ANSI/ASME B46.1.
4. ULTRASONIC INSPECT PER MIL-STD-2154, PRIOR TO FABRICATION. ACCEPTANCE PER SECTION 5.5.4., TABLE VI, CLASS LEVEL 2.
5. ELECTROLESS NICKEL COATING .0002-.0003 INCH PER MIL-C-26074E, CLASS 4, GRADE B.
6. ELECTROCHEMICAL ETCH DRAWING PART NUMBER 67212MEDH155 ON SPECIFIED SURFACE PER SAE AS478, METHOD 7A (ZONE B-C7).
7. INSTALL KEENSERT NO. KNML 5X0.8 INCH PER MANUFACTURER'S SPECIFICATIONS AFTER SURFACE TREATMENT PER NOTE 5.
8. HANDLE WITH CLEAN, LINT-FREE GLOVES.
9. CLEAN SURFACES WITH 190 PROOF ETHYL ALCOHOL. WIPE WITH CLEAN COTTON SWABS AND/OR LINT-FREE CLOTH.
10. BEFORE STORAGE, PROTECT WITH CONTAMINATION BARRIER. USE CLEAN, NEW, TRANSPARENT, POLYETHYLENE BAG FOR SMALL ITEMS, OR 4 MIL THICK MINIMUM POLYETHYLENE SHEET SEALED WITH FIBERGLASS PACKAGING TAPE. SEAL AND MARK WITH IDENTIFICATION NUMBER ON TAG ATTACHED TO BAG.
11. PROCESS PLAN REQUIRED.
12. ESTIMATED WEIGHT: 1.012 Kg.

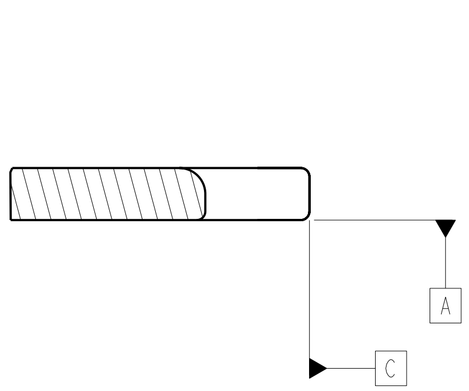

SECTION **A-A**
SCALE 2:1

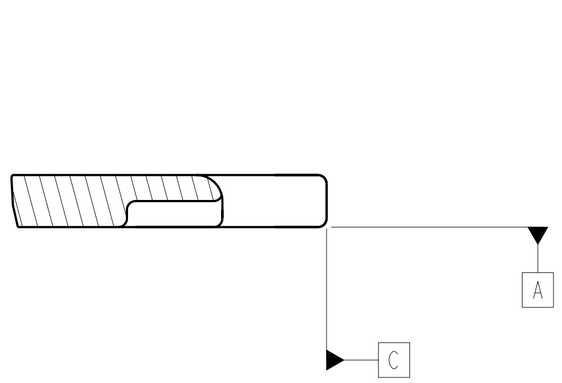

SECTION **B-B**
SCALE 2:1

CHG	ZONE	DESCRIPTION	APP/DATE
A	C7 AND DETAIL D	ADDED 3 HOLES: ONE CLEARENACE ONLY AND 2 KEENSERTED.	MJA 09/19/00
	C3	ADDED 2 CUTOUTS FOR ELECTRICAL CONNECTORS OF SHELL SIZES 11 AND 15. UPDATED NOTE 1 TO CURRENT SPEC.	

REVISIONS

PRIOR TO USE VERIFY THE INTENDED PURPOSE IN PDM ("FOR" ATTRIBUTE)

UNLESS OTHERWISE SPECIFIED:
1. ALL DIMENSIONING AND TOLERANCING PER ASME Y14.5M-1994
2. ALL DIMENSIONS ARE IN MILLIMETERS
3. BREAK EDGES: 0.2-0.5
4. LINEAR TOLERANCES:
   0.5-6 ±0.1
   OVER 6-30 ±0.2
   OVER 30- 120 ±0.3
   OVER 120-315 ±0.5
   OVER 315-1000 ±0.8
   OVER 1000-2000 ±1.2
5. ANGULAR TOLERANCES: 0° 30′

CONTRACT	NAS3-99155
CONTRACTOR	ANALEX
TASK ORDER	-
DRAFTER	M. AYNIK
ENGINEER	ANLX/ M. ROBBIE
DESIGNER	ADF/ J. IMBURGIA

THIRD ANGLE PROJECTION

NATIONAL AERONAUTICS AND SPACE ADMINISTRATION
JOHN H. GLENN RESEARCH CENTER
LEWIS FIELD
CLEVELAND, OHIO

OPTIC BENCH ASSEMBLY
67212MELH150

155 FOMA RIGHT COVER PLATE

PDM REL LEVEL: **RELEASE** PDM REVISION: x.7+
PDM DATABASE: FCF
MODEL NAME: 67212MEDH155
CHECK FOR ANY OUTSTANDING ECO'S PRIOR TO USE

SIZE	DRAWING NUMBER	REV	BLDG	AREA
A1	67212MEDH155	A	333	-
			UNITS: mm	
SCALE: 1:2 & AS NOTED	INITIAL REL DATE 08/03/99	SHEET 1 OF 1	DISCIPLINE MECHANICAL	

REV A
DRAWING NUMBER 67212MEDH155
SIZE A1

PRO/E VERSION: 20.0

NAME:EDJEN OBJECT:67212MEDH155 DATE:27-Oct-00 16:01:30