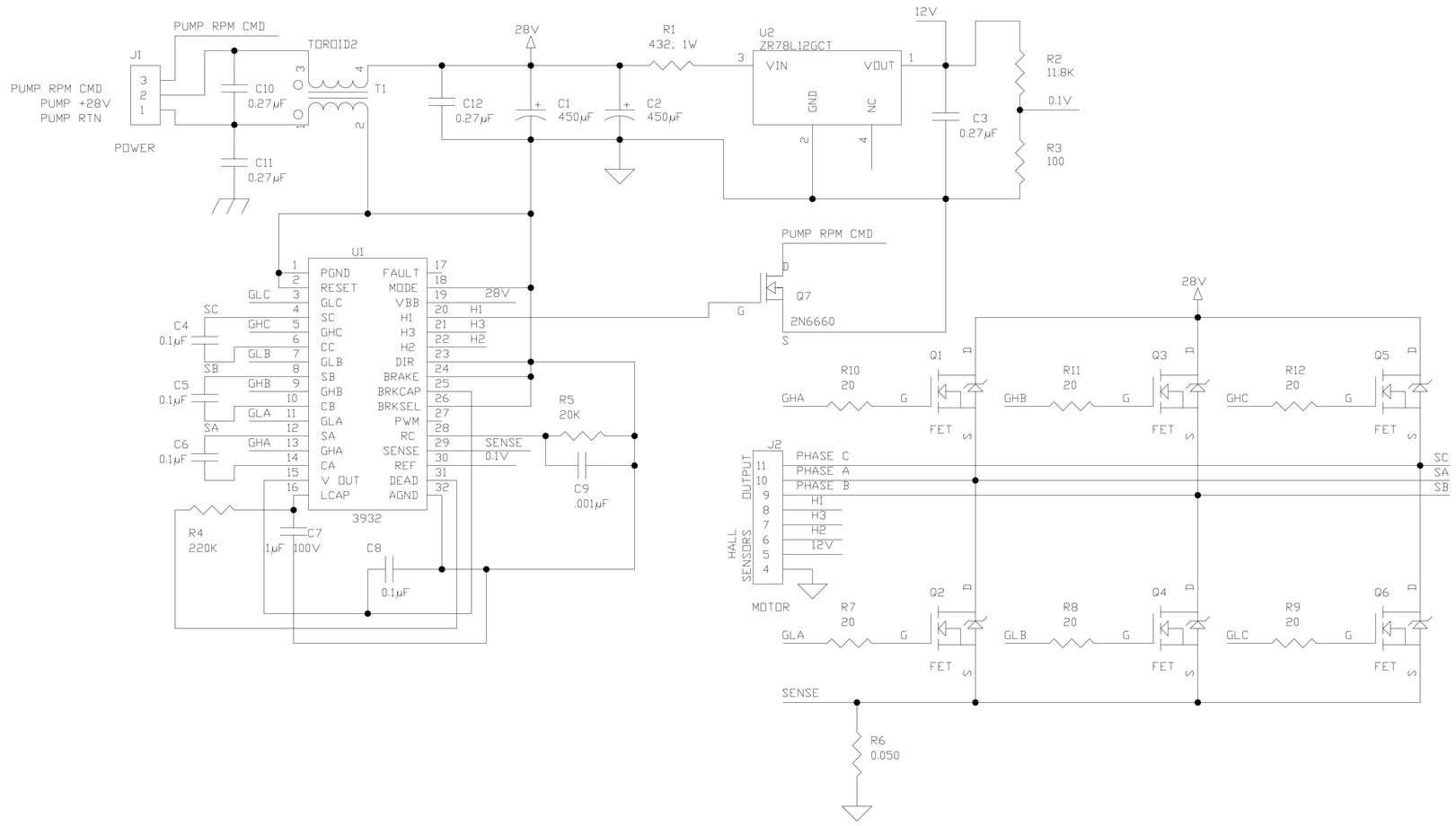

AUTHORIZED by CM when under FORMAL Configuration Control			
CHG	ZONE	DESCRIPTION	APP/DATE

REVISIONS

PROJECT CIR

UNLESS OTHERWISE SPECIFIED ALL DIMENSIONS ARE IN INCHES

TOLERANCE ON	
.X	+/-
.XX	+/-
.XXX	+/-
FRACTION	+/-
ANGULAR	+/-
SOFTWARE: ORCAD 9.1	

National Aeronautics and Space Administration
John H. Glenn Research Center
Lewis Field
Cleveland, Ohio
CONTRACT NUMBER: NAS3-99155

APPROVALS

PROJECT LEAD	M. O'TOOLE		
ELECTRICAL LEAD	S. LAWYER		
ELECTRICAL ENGINEER	S. LAWYER		
CHECKER	-		
DESIGNER	J. FLEISCHER		
MAT'L PROC.	-		
CONFIG. MGT	-		

DRAWING NAME
RECIRCULATION PUMP MOTOR CONTROLLER SCHEMATIC

NEXT ASSEMBLY
67212MELHTBD

SIZE	CAGE CODE	DRAWING NUMBER	REV.
C	1PMJ4	67212EESM145	1

SCALE: N/A	RELEASE DATE Thursday, October 12, 2000	SHEET 1 OF 1

FILE NAME: G:\FCF\LAWYERS\PDR SCHEMATIC DRAWINGS\67212EESM145.DSN