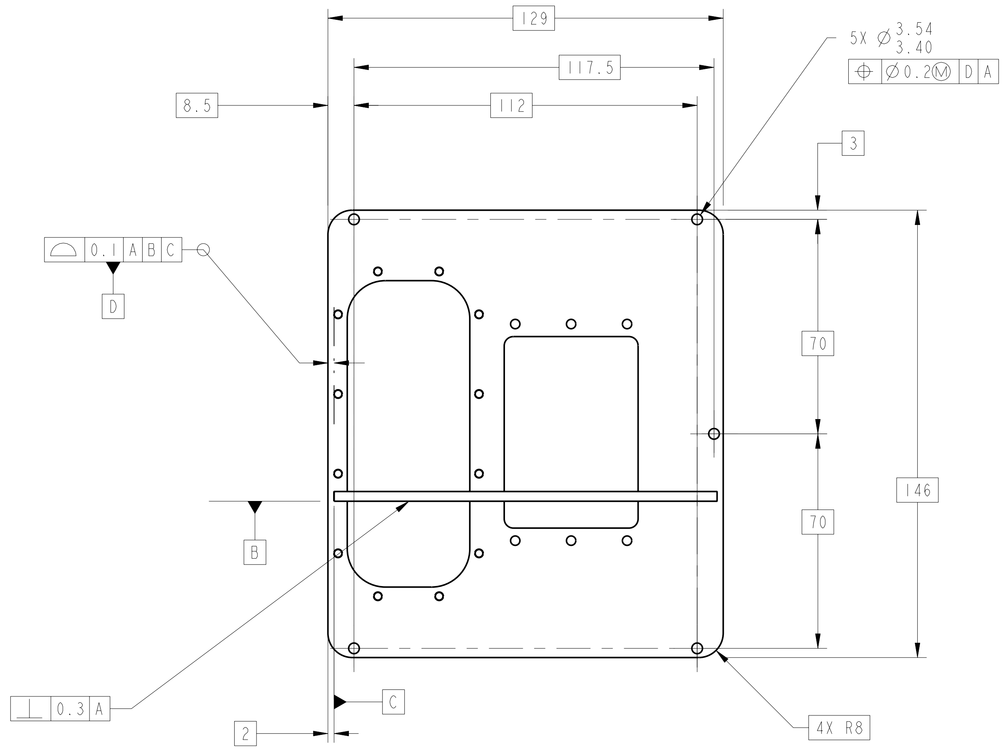

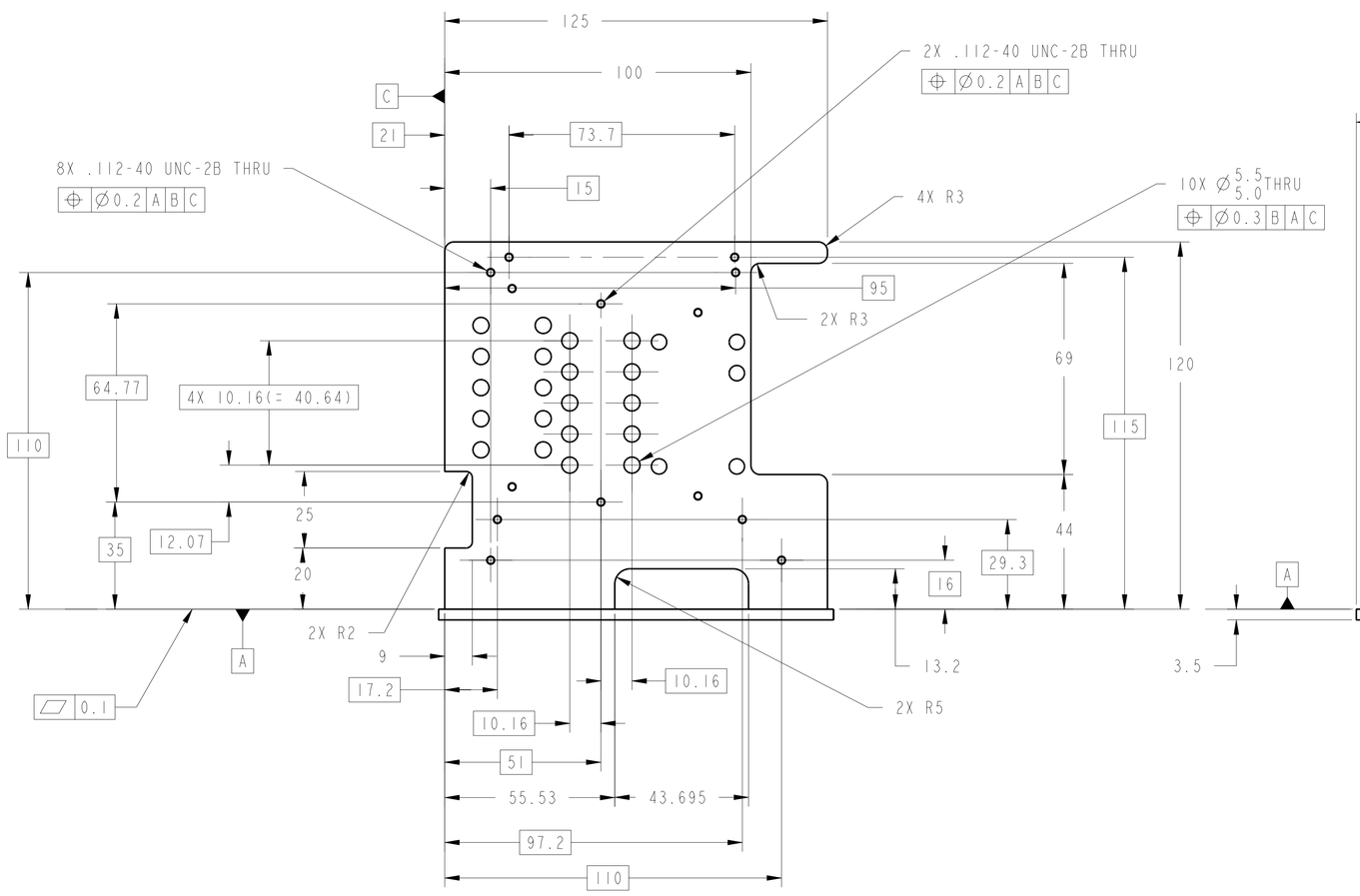

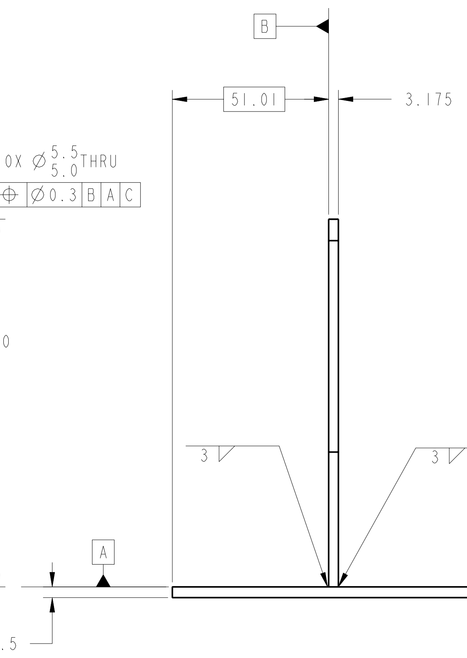

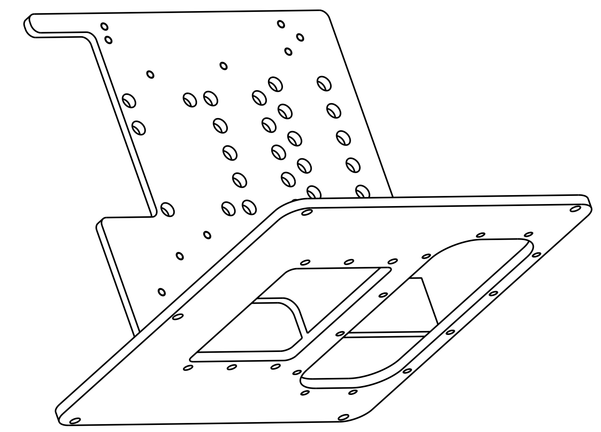

ISO VIEW

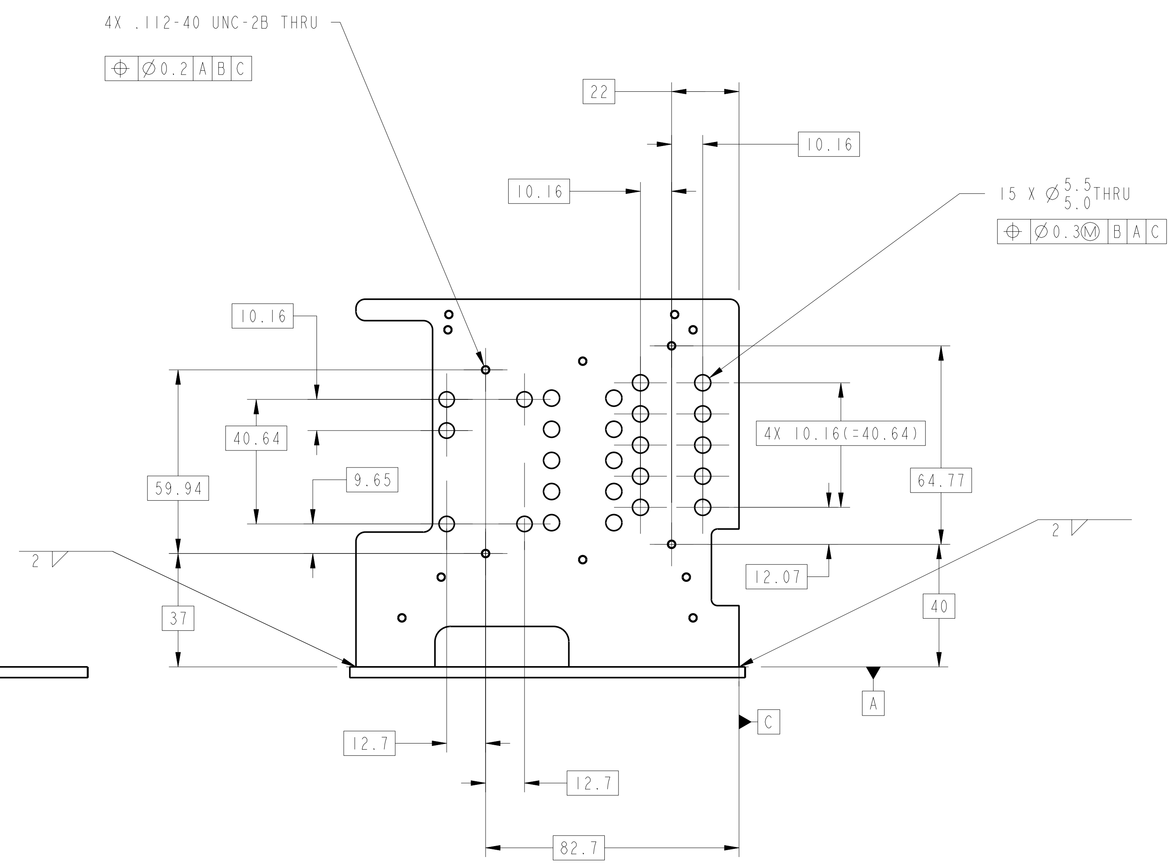

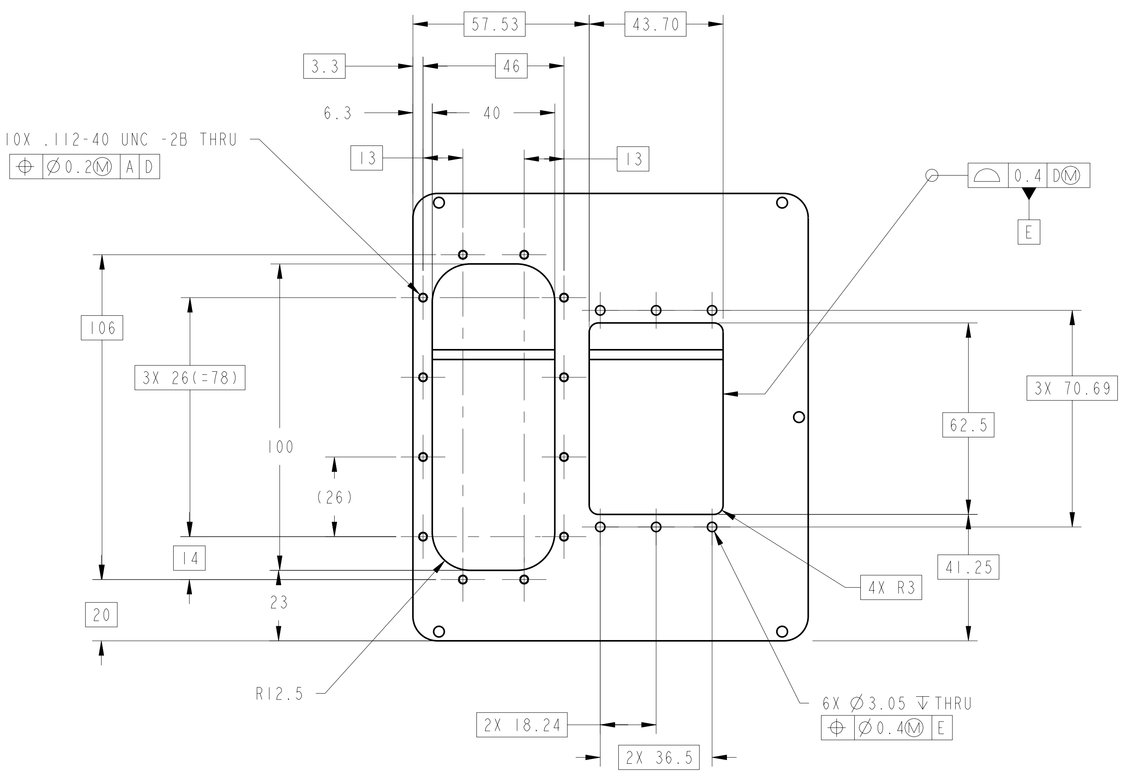

1. MATERIAL:
   6061-T6 ALUMINUM PER
   SAE-AMS-QQ-A-250F

2. CERTIFICATE OF CONFORMANCE REQUIRED FOR MATERIAL.

3. 1.6 Ra ALL OVER PER ANSI/ASME B46.1.

4. SURFACE TREATMENT: CLASS 3 CHEMICAL CONVERSION COATING PER MIL-C-5541: YELLOW/GOLD; USE IRIDITE 14-2 (ref. MACDERMID INC.); APPLY BY BRUSH OR IMMERSION AS APPLICABLE. BRUSH AND/OR SWAB TOUCH UP PER MIL-C-5541 SEC. 3.4; USE IRIDITE 14-2 BRUSH-ON KIT. THE USE OF IRIDITE 14-2 EQUIVALENT(S) IS PROHIBITED UNLESS SPECIFICALLY APPROVED BY ENGINEERING.

5. BEFORE STORAGE, PROTECT WITH CONTAMINATION BARRIER. USE CLEAN, NEW, TRANSPARENT, POLYETHYLENE BAG FOR SMALL ITEMS, OR 4 MIL THICK MINIMUM POLYETHYLENE SHEET SEALED WITH FIBERGLASS PACKAGING TAPE. SEAL AND MARK WITH IDENTIFICATION NUMBER ON TAG ATTACHED TO BAG.

6. PROCESS PLAN REQUIRED.

7. CLEAN SURFACES WITH 190 PROOF ETHYL ALCOHOL. WIPE WITH CLEAN COTTON SWABS AND/OR LINT-FREE CLOTH.

8. ESTIMATED WEIGHT=0.217 Kg.

CHG	ZONE	DESCRIPTION	APP/DATE

REVISIONS

UNLESS OTHERWISE SPECIFIED:
1. ALL DIMENSIONING AND TOLERANCING PER ASME Y14.5M-1994
2. ALL DIMENSIONS ARE IN MILLIMETERS
3. BREAK EDGES: 0.2-0.5
4. LINEAR TOLERANCES:
   0.5-6 ±0.1
   OVER 6-30 ±0.2
   OVER 30-120 ±0.3
   OVER 120-315 ±0.5
   OVER 315-1000 ±0.8
   OVER 1000-2000 ±1.2
5. ANGULAR TOLERANCES: 0° 30'

THIRD ANGLE PROJECTION

CONTRACT	NAS3-99155
CONTRACTOR	ANALEX CORP.
TASK ORDER	4100-320
DRAFTER	M.HOYCHICK
ENGINEER	S. LEIGHT
DESIGNER	M.HOYCHICK

NATIONAL AERONAUTICS AND SPACE ADMINISTRATION
JOHN H. GLENN RESEARCH CENTER
LEWIS FIELD
CLEVELAND, OHIO

DIAGNOSTIC CONTROL MODULE

67211MEDB20000

DIAGNOSTIC CONTROL MODULE TEE PLATE

PDM REL LEVEL: RELEASE PDM REVISION: x.4
PDM DATABASE: FCF
MODEL NAME: 67211MEDB20002
PRIOR TO USE VERIFY THE INTENDED PURPOSE IN PDM ("FOR" ATTRIBUTE)

SIZE	DRAWING NUMBER	REV	BLDG	AREA
A0	67211MEDB20002	-	333	-
			UNITS: mm	
SCALE: 1:1	INITIAL REL DATE XX/XX/XXXX	SHEET 1 OF 1	DISCIPLINE XXX	

PRO/E VERSION: 20.0

REV -
SIZE A0
DRAWING NUMBER 67211MEDB20002

NAME:FD.BA OBJECT:67211MEDB20002 DATE:27-Oct-00 15:39:27