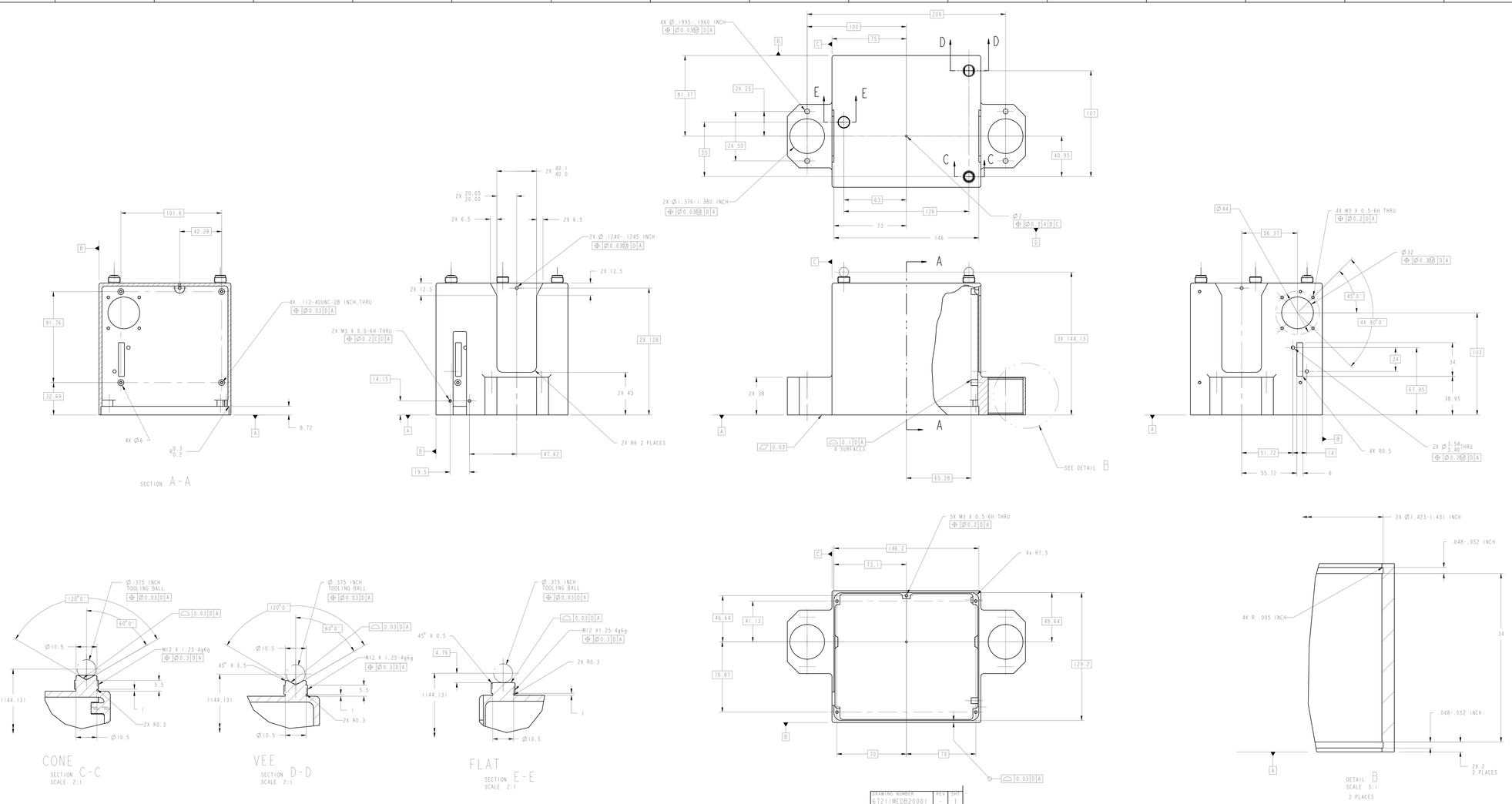

1. MATERIAL: 6061-T6 ALUMINUM PER SAE-AMS-QQ-A-250F.
2. CERTIFICATE OF CONFORMANCE REQUIRED FOR MATERIAL.
3. 1.6 Ra ALL OVER PER ANSI/ASME B46.1.
4. ELECTROLESS NICKEL COATING .0002-.0003 INCH PER MIL-C-26074E CLASS 4,GRADE B. MASK ALL BLIND THREADS.
5. BEFORE STORAGE, PROTECT WITH CONTAMINATION BARRIER: USE CLEAN, NEW, TRANSPARENT, POLYETHYLENE BAG FOR SMALL ITEMS; OR 4 MIL THICK MINIMUM POLYETHYLENE SHEET SEALED WITH FIBERGLASS PACKAGING TAPE. SEAL AND MARK WITH IDENTIFICATION NUMBER ON TAG ATTACHED TO BAG.
6. PROCESS PLAN REQUIRED.
7. CLEAN SURFACES WITH 190 PROOF ETHYL ALCOHOL. WIPE WITH CLEAN COTTON SWABS AND/OR LINT-FREE CLOTH.
8. ESTIMATED WEIGHT: 1.370 Kg.

UNLESS OTHERWISE SPECIFIED: 1. ALL DIMENSIONING AND TOLERANCING PER ASME Y14.5M-1994. 2. ALL DIMENSIONS ARE IN MILLIMETERS. 3. BREAK EDGES: 0.2-0.5 4. LINEAR TOLERANCES: 0.5-6 ±0.1 OVER 6-30 ±0.2 OVER 30-120 ±0.3 OVER 120-315 ±0.5 OVER 315-1000 ±0.8 OVER 1000-2000 ±1.2 5. ANGULAR TOLERANCES: 0°30'	CONTRACT NASA-99155	CONTRACTOR ANALEX CORP.	CHG. ZONE DESCRIPTION APP/DATE REVISIONS:	NATIONAL AERONAUTICS AND SPACE ADMINISTRATION JOHN H. GLENN RESEARCH CENTER 21000 BROOKPARK ROAD CLEVELAND, OHIO
	CODE 41001-320	DRAFTER M. HOMCHICK		DIAGNOSTIC CONTROL MODULE
	ENGINEER S. LEIGHT			6721IMEDB20000
	DESIGNER M. HOMCHICK	THIRD ANGLE PROJECTION		DIAGNOSTIC CONTROL MODULE HOUSING
PDM REL LEVEL: RELEASE	PDM REVISION: x.5		SIZE R2	DRAWING NUMBER 6721IMEDB20001
PDM DATABASE: PCF MODEL NAME: 6721IMEDB20001			SCALE: 2:1	INITIAL REL DATE 02/12/03
PRIOR TO USE VERIFY THE INTENDED PURPOSE IN PDM TYPE: ATTR=Date			REV	BLDG	AREA
			SHEET 1 OF 1	DISCIPLINE

DRAWING NUMBER 6721IMEDB20001 REV SHT 1

R2 6721IMEDB20001

PROJE VERSION: 19.0