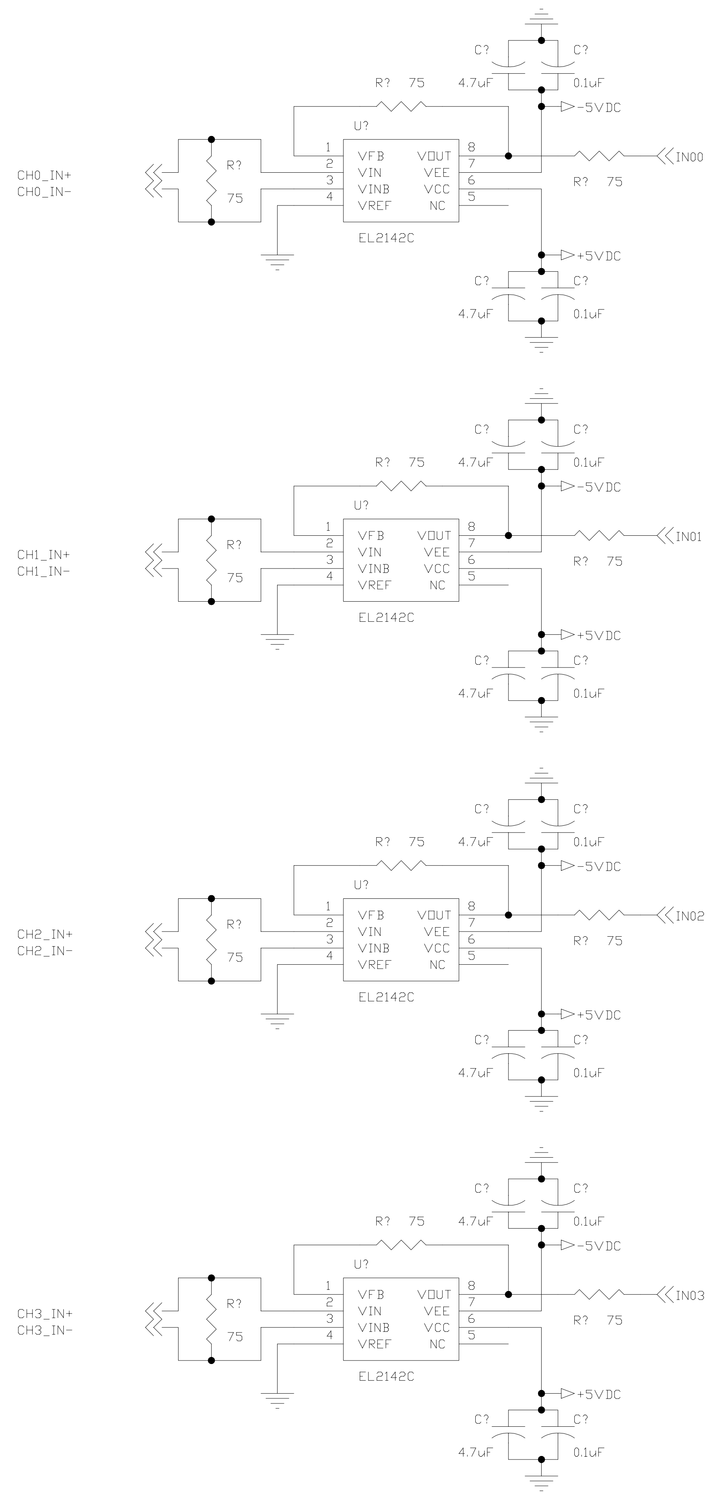

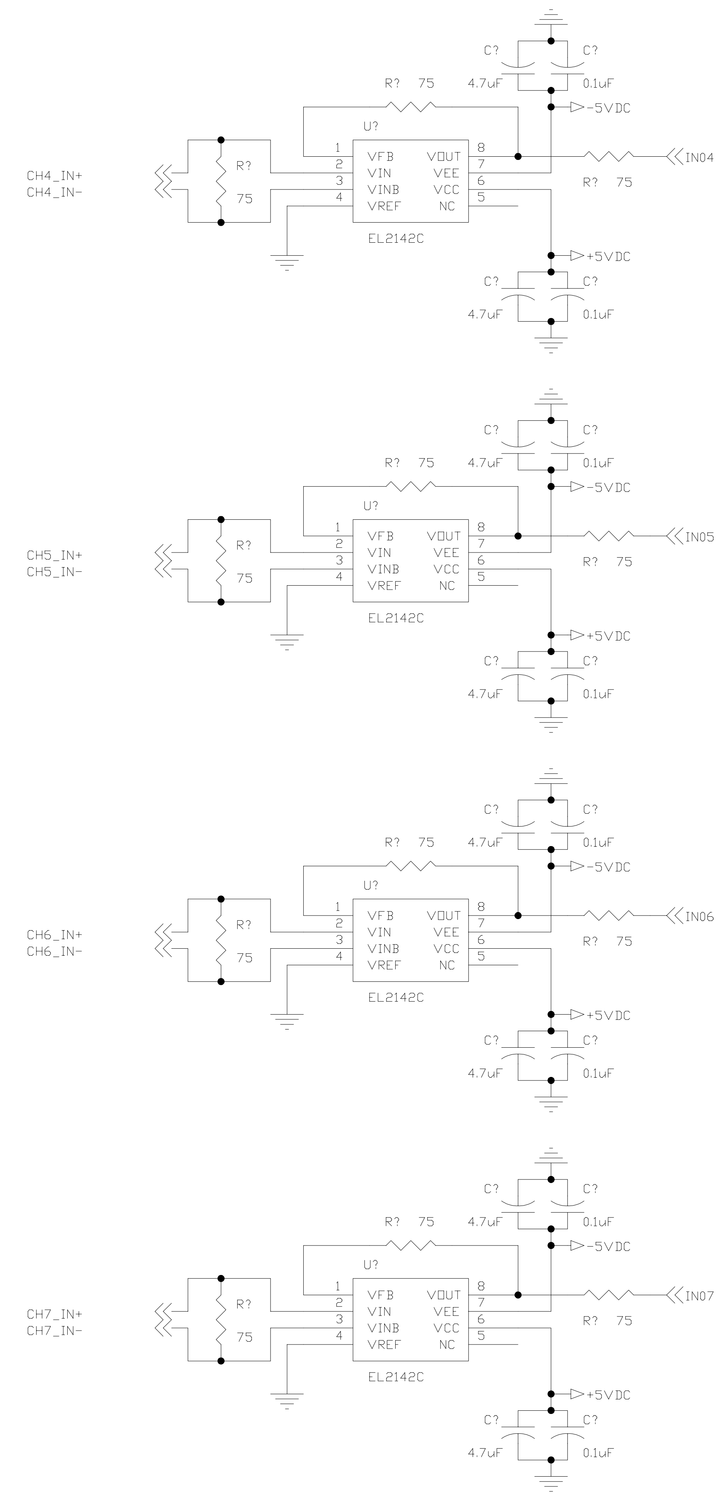

AUTHORIZED by CM when under FORMAL Configuration Control			
CHG	ZONE	DESCRIPTION	APP/DATE

REVISIONS

PROJECT
FCF - COMMON SYSTEMS

UNLESS OTHERWISE SPECIFIED
ALL DIMENSIONS ARE IN INCHES

TOLERANCE ON	
.X	+/-
.XX	+/-
.XXX	+/-
FRACTION	+/-
ANGULAR	+/-
SOFTWARE: ORCAD 9.1	

National Aeronautics and Space Administration
John H. Glenn Research Center
Lewis Field
Cleveland, Ohio
CONTRACT NUMBER: NAS3-99155

APPROVALS

PROJECT LEAD	N. BOZZOLO		
ELECTRICAL LEAD	M. CASCIANI		
ELECTRICAL ENGINEER	M. CASCIANI		
CHECKER	-		
DESIGNER	J. FLEISCHER		
MAT'L PROC.	-		
CONFIG. MGT	-		

DRAWING NAME
IOP VIDEO SWITCH BOARD
SCHEMATIC

NEXT ASSEMBLY
INPUT/OUTPUT PACKAGE
67211MELM300

SIZE	CAGE CODE	DRAWING NUMBER	REV.
C		67211EESB330	1

FILE NAME: G:\FCF\LAWYERS\PDR SCHEMATIC DRAWINGS\67211EESB330.DSN

SCALE: N/A | RELEASE DATE Wednesday, October 18, 2000 | SHEET 6 OF 8